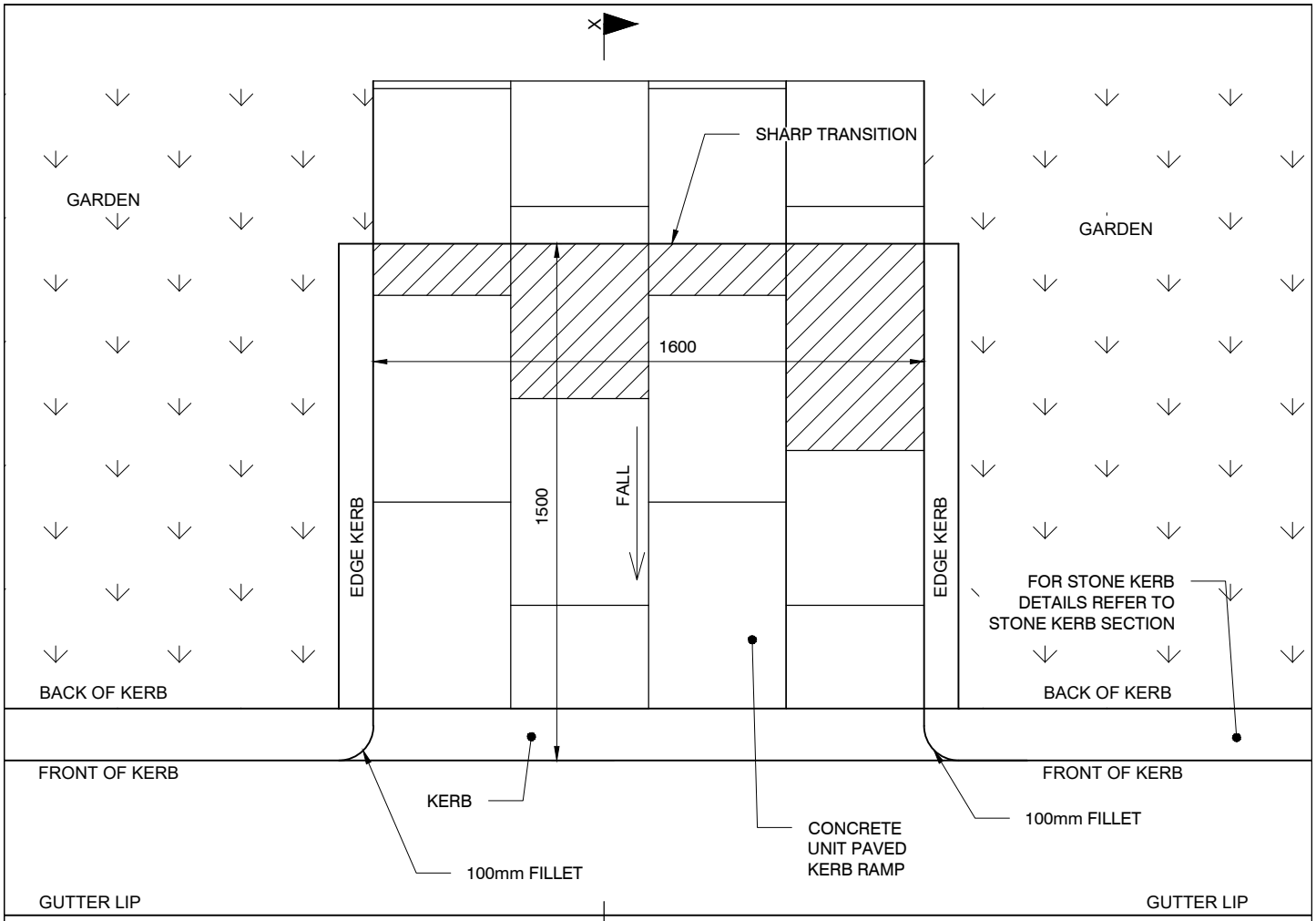

PLAN 1:20

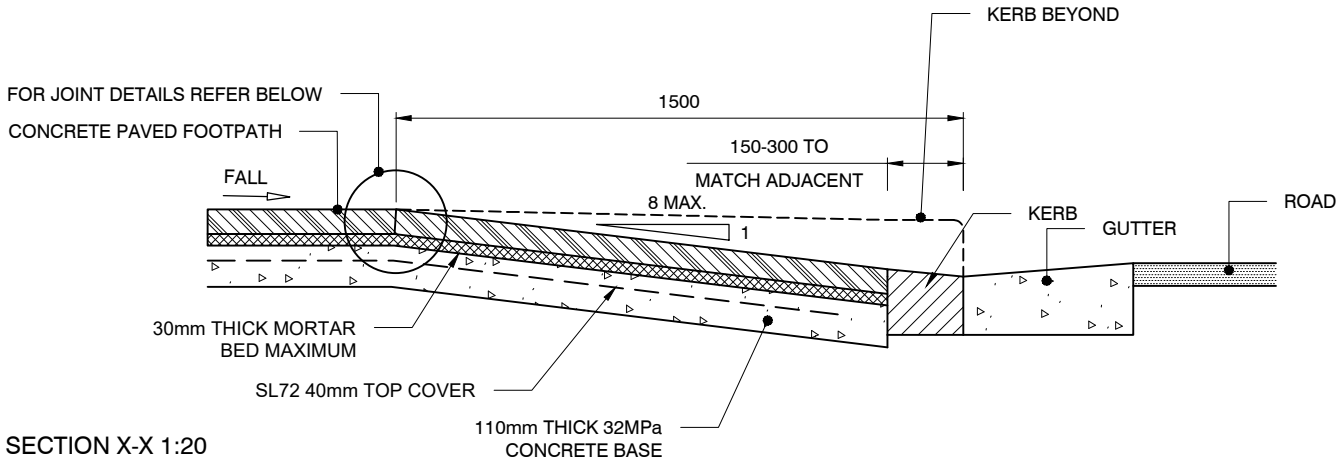

SECTION X-X 1:20

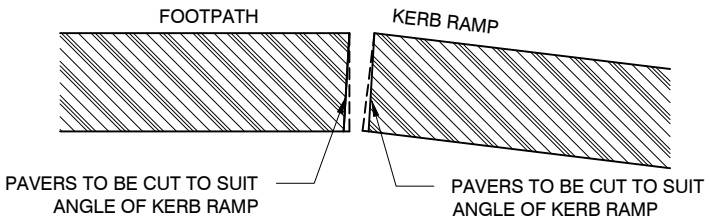

DETAIL 1:5

NOTE: ALL DIMENSIONS IN MILLIMETRES UNLESS OTHERWISE STATED

CITY OF SYDNEY

CONCRETE UNIT PAVING

PEDESTRIAN RAMP (ADJACENT GARDEN)

FOOTWAYS

Rev	D
Date	*01.12.19*
Approved	P S

Dwg No. 2.3.7