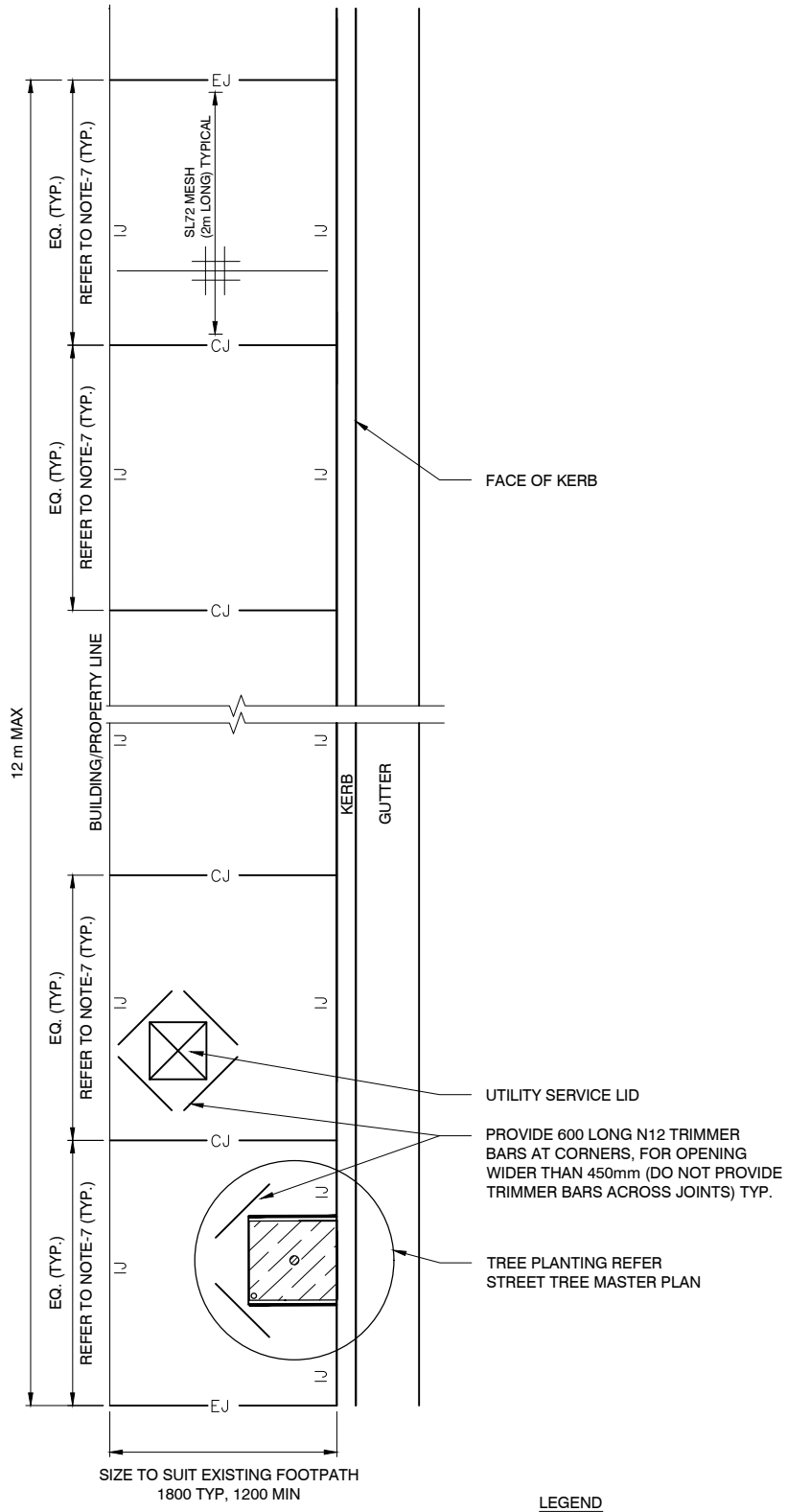

NOTES:

1. DETAIL ONLY TO BE USED IF MATCHING EXISTING, CITY REPRESENTATIVE TO APPROVE.
2. ALL EXPOSED CONCRETE SURFACES MUST BE FINISHED WITH A MEDIUM BROOM FINISH GENERALLY PERPENDICULAR TO THE DIRECTION OF TRAVEL.
3. ALL CONCRETE SLABS MUST HAVE AN ISOLATION JOINT ALONG THE BUILDING LINE, KERB LINE AND ANY PENETRATIONS (EXCEPT WHEN USING BRICK KERBS).
4. ANY FOOTPATH THAT MAY BE SUBJECT TO VEHICULAR LOADS (SUCH AS GARBAGE TRUCKS IN NARROW LANES OR AT INTERSECTIONS WITH A TIGHT TURNING CIRCLE WHERE VEHICLES MAY MOUNT THE FOOTWAY) MUST HAVE AT LEAST 150 mm THICK REINFORCED CONCRETE FOOTPATH WITH SL92 MESH (40 mm TOP COVER).
5. CONCRETE FOOTWAYS TO BE 1.8 m WIDE TYPICAL (MINIMUM OF 1.2 m WIDE, OR AS DIRECTED BY COUNCIL.)
6. TYPICALLY ALLOW FOR EXPANSION JOINTS AT 12 m (MAX) SPACING
7. CONTRACTION JOINT SPACINGS OR SLAB PANELS TO A MAXIMUM ASPECT RATIO OF 1:1.5 (NO GREATER THAN 1.5 TIMES THE WIDTH OF THE PATH) AND EQUALLY SPACED BETWEEN EXPANSION JOINTS.
8. TRIPSTOP OR EQUIVALENT TO BE USED ON CONTRACTION/ CONTROL JOINTS ADJACENT TO TREE. TRIPSTOP JOINTS TO EXTEND ONE FULL PANEL PAST DRIP LINE OF MATURE TREE.
9. ALL DIMENSIONS IN MILLIMETRES UNLESS OTHERWISE STATED.

LEGEND

CJ	CONTRACTION JOINTS
EJ	EXPANSION JOINTS
IJ	ISOLATION JOINTS

CITY OF SYDNEY

CONCRETE PAVING

TYPICAL CONCRETE PAVING JOINTING DETAILS - NO PLANTING

FOOTWAYS

Rev	E	Dwg No.
Date	*16.11.22*	2.6.1
Approved	S A	

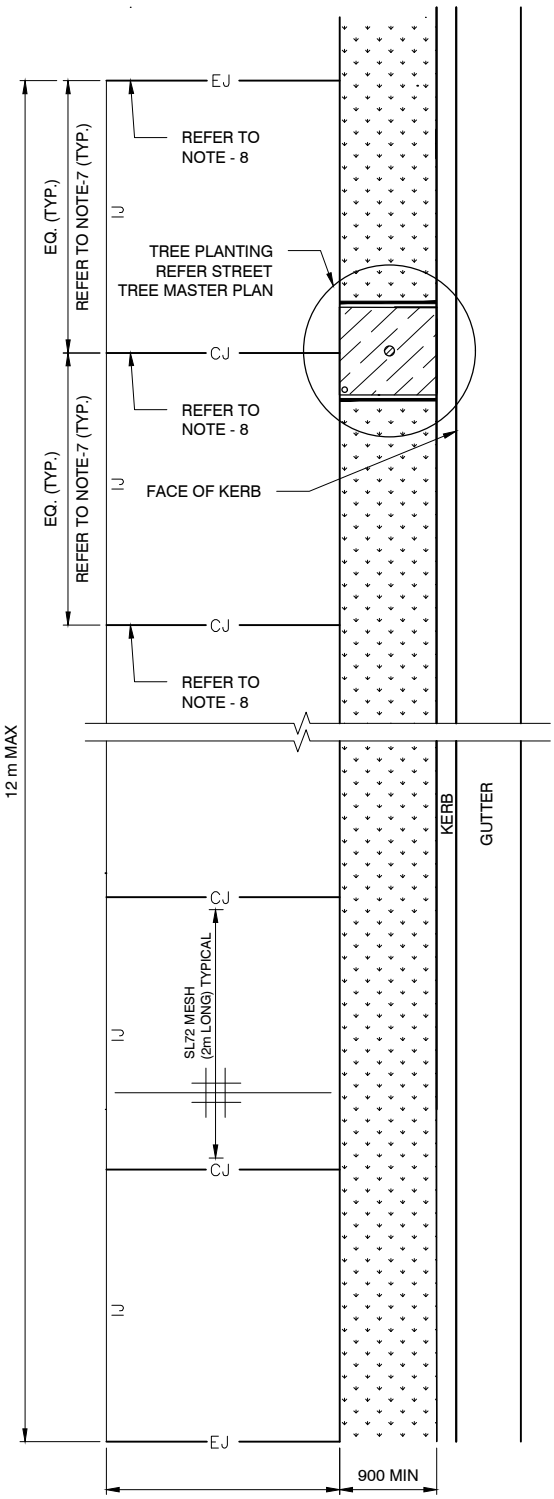

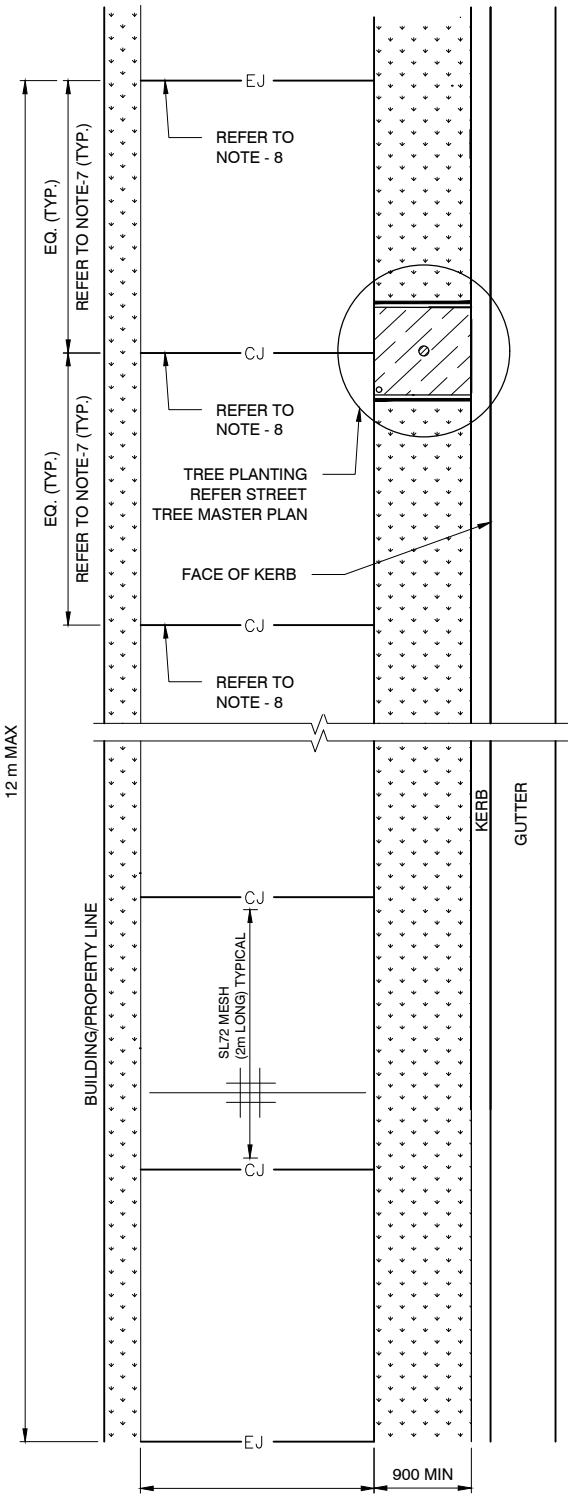

NOTES:

1. DETAIL ONLY TO BE USED IF MATCHING EXISTING, CITY REPRESENTATIVE TO APPROVE.
2. ALL EXPOSED CONCRETE SURFACES MUST BE FINISHED WITH A MEDIUM BROOM FINISH GENERALLY PERPENDICULAR TO THE DIRECTION OF TRAVEL.
3. ALL CONCRETE SLABS MUST HAVE AN ISOLATION JOINT ALONG THE BUILDING LINE, KERB LINE AND ANY PENETRATIONS (EXCEPT WHEN USING BRICK KERBS).
4. ANY FOOTPATH THAT MAY BE SUBJECT TO VEHICULAR LOADS (SUCH AS GARBAGE TRUCKS IN NARROW LANES OR AT INTERSECTIONS WITH A TIGHT TURNING CIRCLE WHERE VEHICLES MAY MOUNT THE FOOTWAY) MUST HAVE AT LEAST 150 mm THICK REINFORCED CONCRETE FOOTPATH WITH SL92 MESH (40 mm TOP COVER).
5. CONCRETE FOOTWAYS TO BE 1.8 m WIDE TYPICAL (MINIMUM OF 1.2 m WIDE, OR AS DIRECTED BY COUNCIL.)
6. TYPICALLY ALLOW FOR EXPANSION JOINTS AT 12 m (MAX) SPACING
7. CONTRACTION JOINT SPACINGS OR SLAB PANELS TO A MAXIMUM ASPECT RATIO OF 1:1.5 (NO GREATER THAN 1.5 TIMES THE WIDTH OF THE PATH) AND EQUALLY SPACED BETWEEN EXPANSION JOINTS.
8. TRIPSTOP OR EQUIVALENT TO BE USED ON CONTRACTION/ CONTROL JOINTS ADJACENT TO TREE. TRIPSTOP JOINTS TO EXTEND ONE FULL PANEL PAST DRIP LINE OF MATURE TREE.
9. ALL DIMENSIONS IN MILLIMETRES UNLESS OTHERWISE STATED.

LEGEND

CJ	CONTRACTION JOINTS
EJ	EXPANSION JOINTS
IJ	ISOLATION JOINTS

CITY OF SYDNEY

CONCRETE PAVING
TYPICAL CONCRETE PAVING JOINTING DETAILS

FOOTWAYS

Rev	E
Date	*16.11.22*
Approved	S A

Dwg No.
2.6.2

PATH/GARDEN

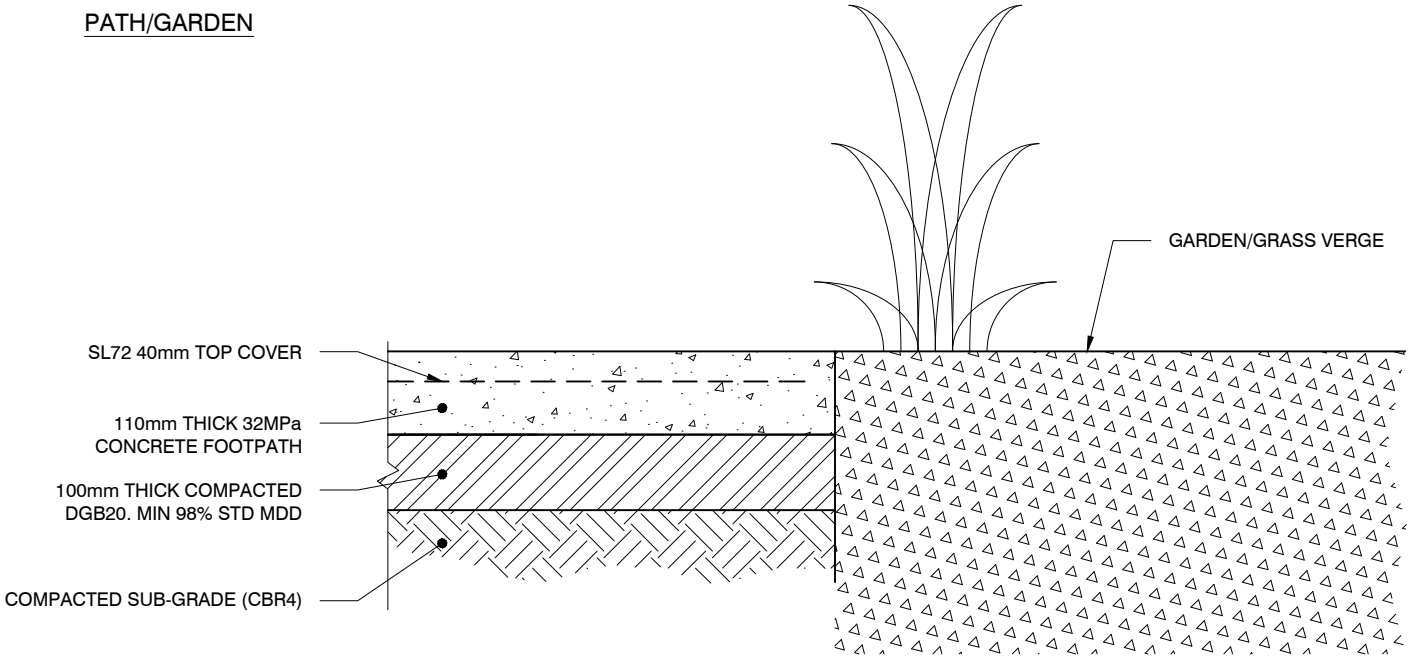

PATH/BUILDING LINE

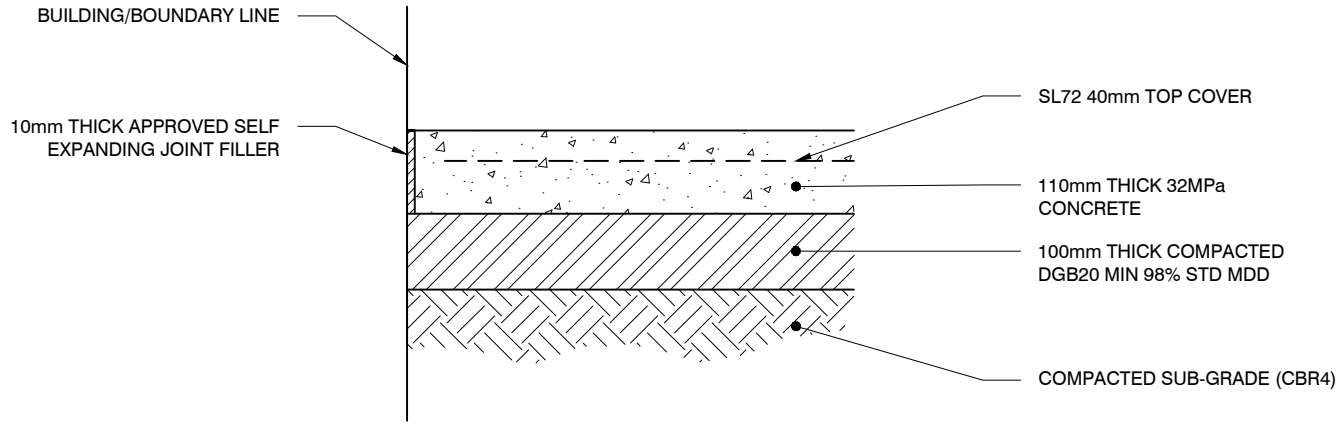

PATH/KERB

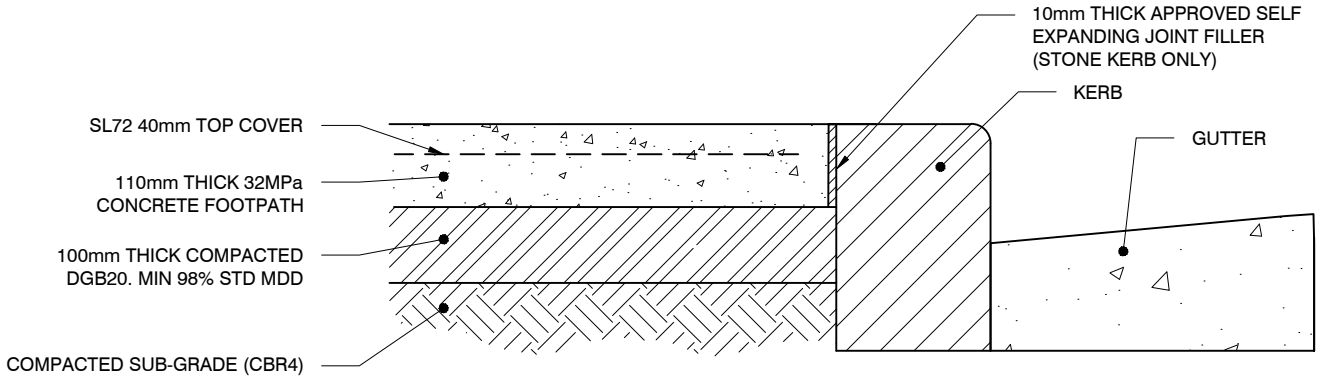

SECTION 1:10

NOTE: ALL DIMENSIONS IN MILLIMETRES UNLESS OTHERWISE STATED

CITY OF SYDNEY	CONCRETE PAVING JUNCTIONS	**Rev** D **Date** *01.12.19* **Approved** P S	FOOTWAYS Dwg No. 2.6.3

EXPANSION JOINT (EJ)

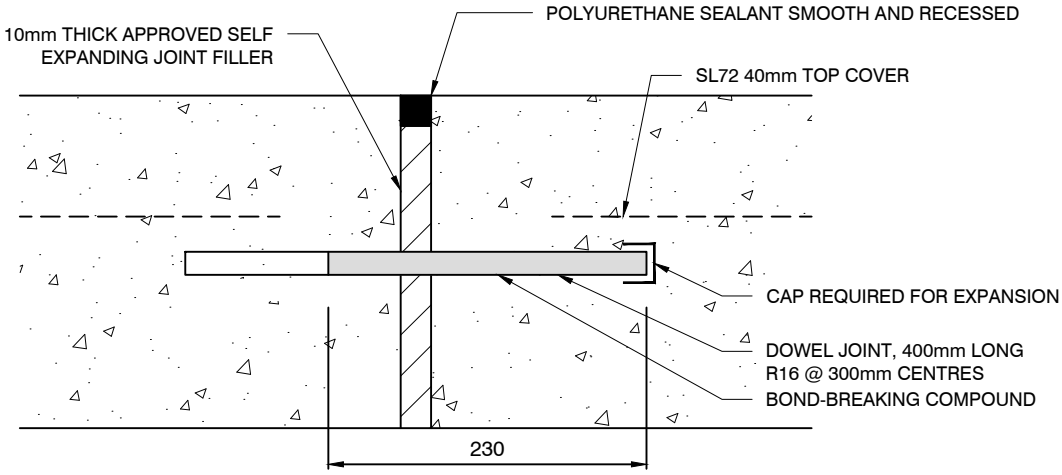

NOTE: BOND-BREAKING COMPONENT AND END CAP MAY BE REPLACED WITH A PURPOSE-MADE DOWEL SLEEVE.

CONTRACTION/CONTROL JOINT (CJ)

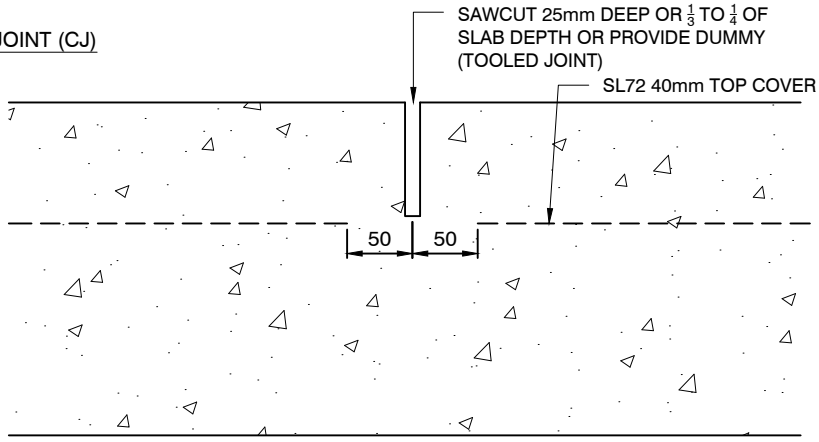

CONSTRUCTION JOINT

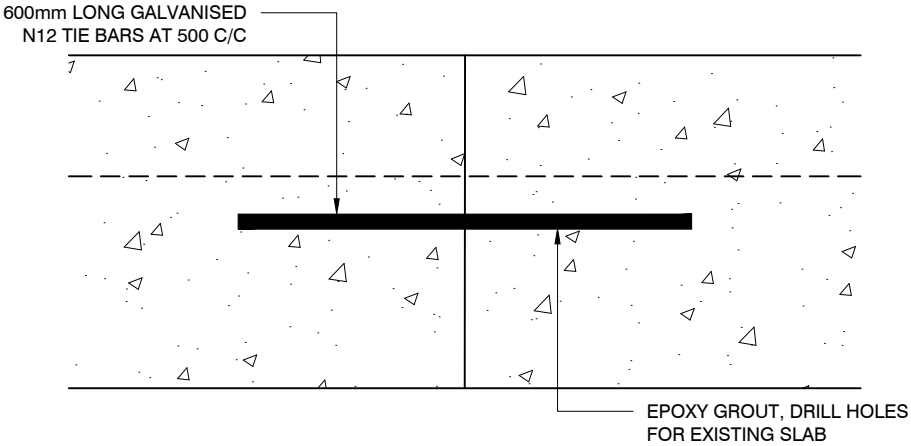

ISOLATION JOINT (IJ)

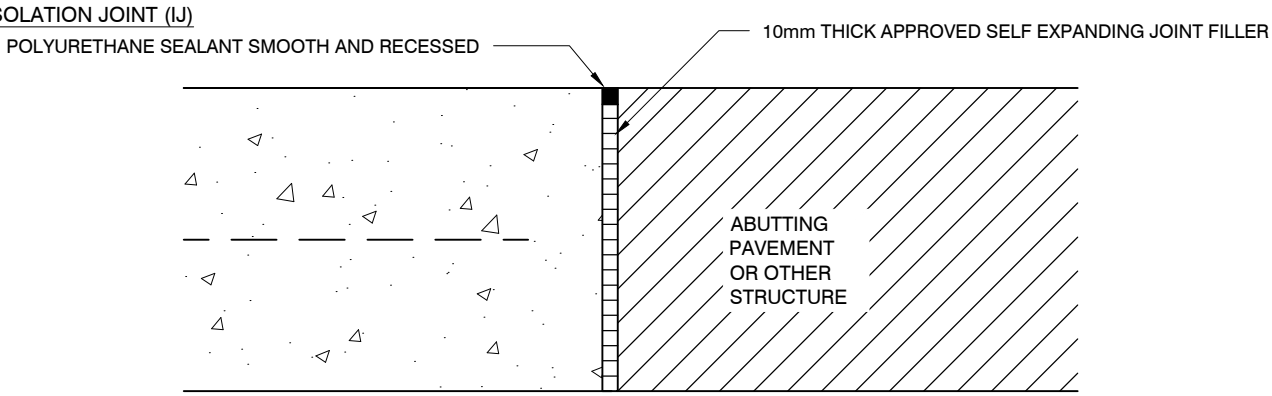

NOTE: ALL DIMENSIONS IN MILLIMETRES UNLESS OTHERWISE STATED

CITY OF SYDNEY	CONCRETE PAVING JOINTS	FOOTWAYS **Rev** D **Date** *01.12.19* **Approved** P S	Dwg No. 2.6.4

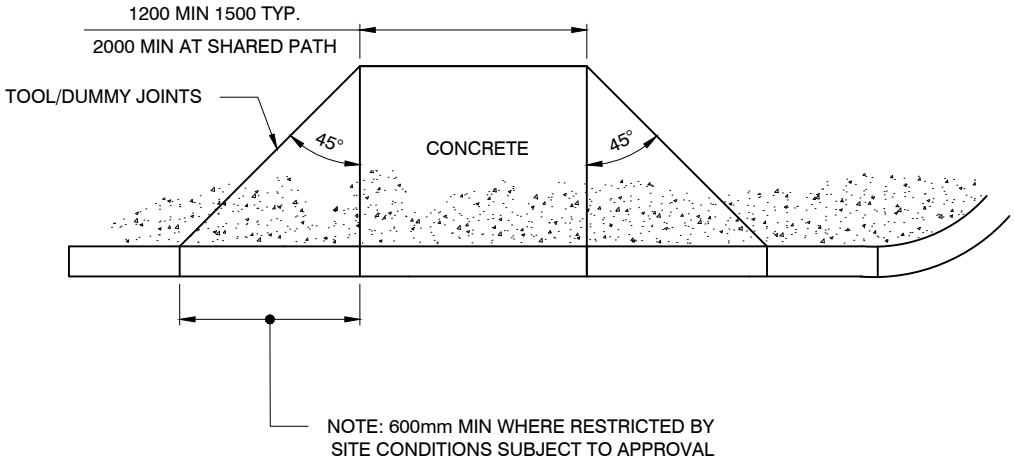

PLAN 1:50

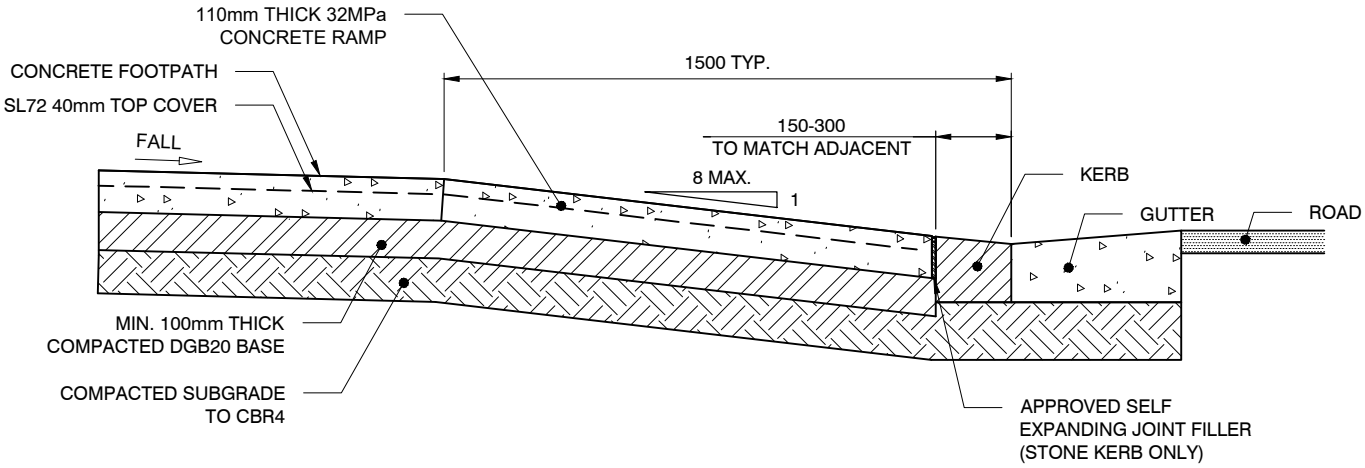

SECTION 1:20

NOTES:

1. ALL DIMENSIONS IN MILLIMETRES UNLESS OTHERWISE STATED.
2. THE 45° WING ANGLE ON KERB RAMPS IS THE GENERAL STANDARD AND TfNSW RECOMMENDATION.
   IF RESTRICTED BY SITE CONDITIONS, THE WING ANGLE CAN BE REDUCED AND DESIGNED TO SUIT SUBJECT TO APPROVAL.

CITY OF SYDNEY	CONCRETE PAVING PEDESTRIAN RAMP	FOOTWAYS **Rev** D **Date** *01.12.19* **Approved** P S Dwg No. 2.6.5

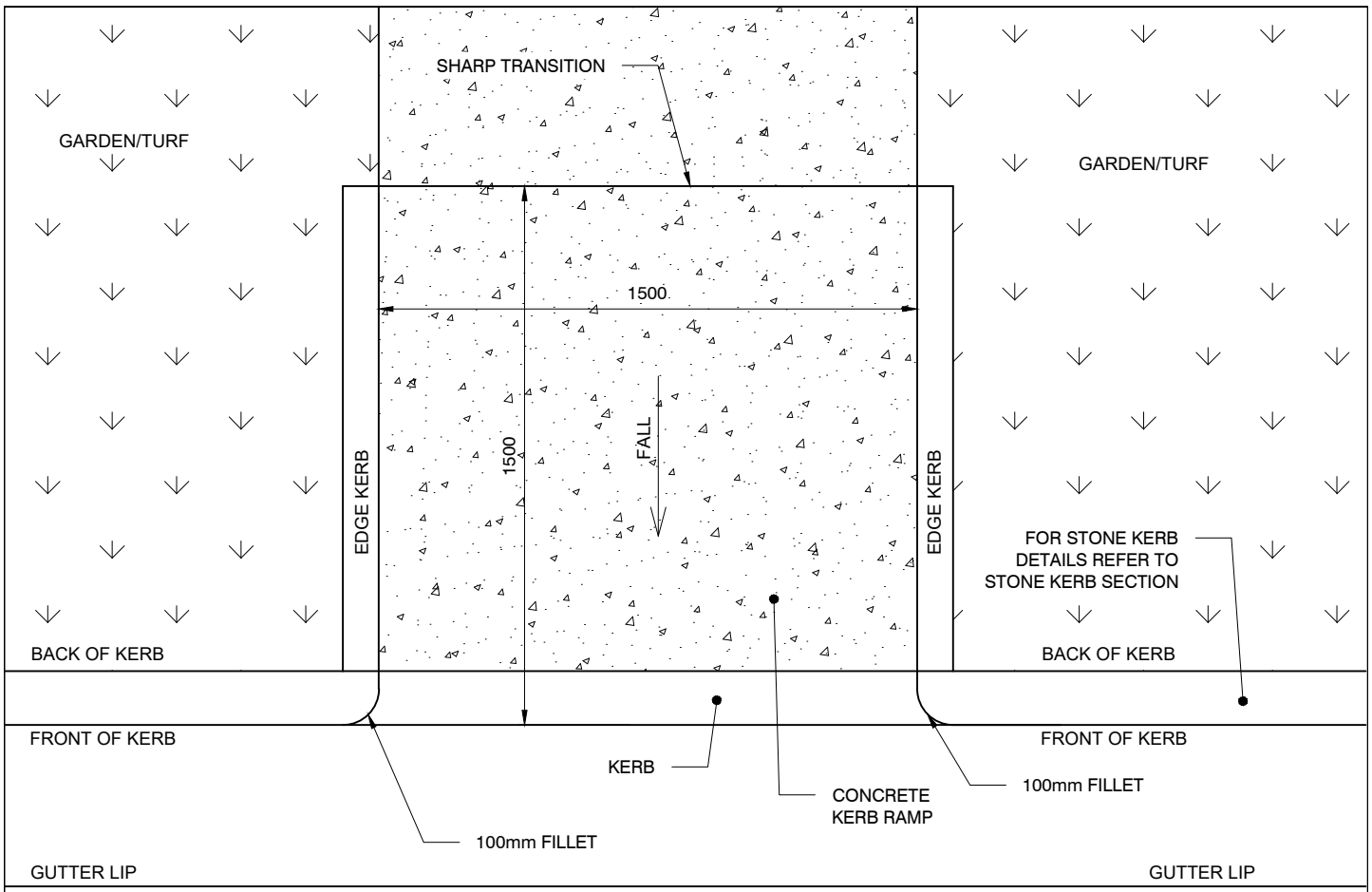

PLAN 1:20

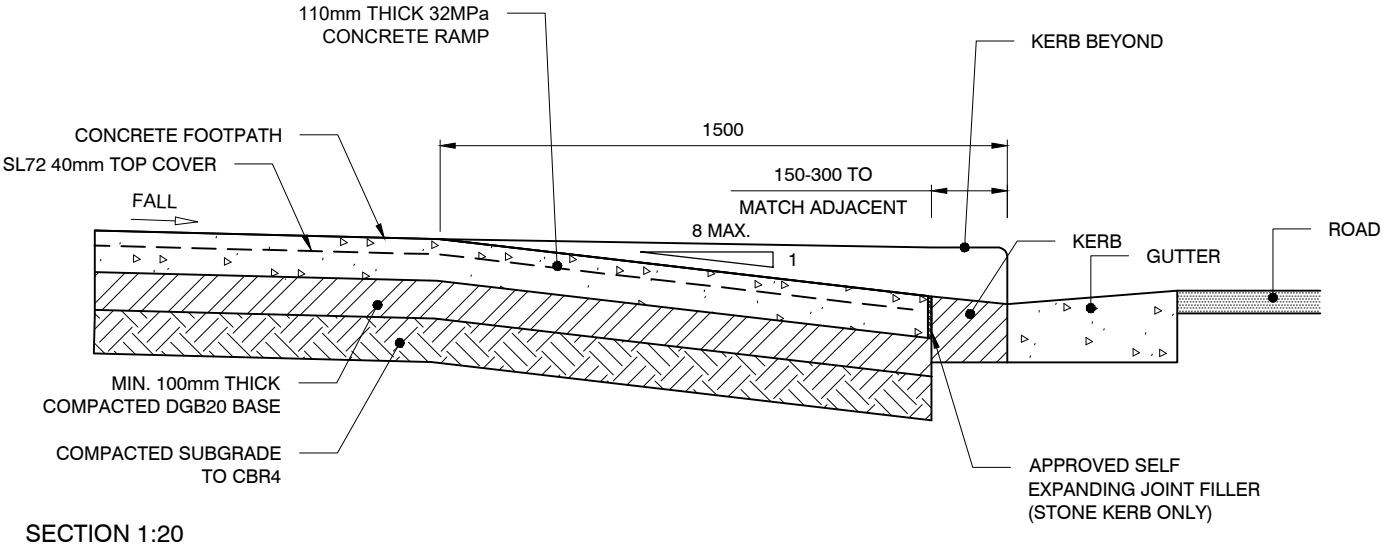

SECTION 1:20

NOTE: ALL DIMENSIONS IN MILLIMETRES UNLESS OTHERWISE STATED

CITY OF SYDNEY

CONCRETE PAVING

PEDESTRIAN RAMP (ADJACENT GARDEN)

FOOTWAYS

Rev	D
Date	*01.12.19*
Approved	P S

Dwg No. 2.6.6

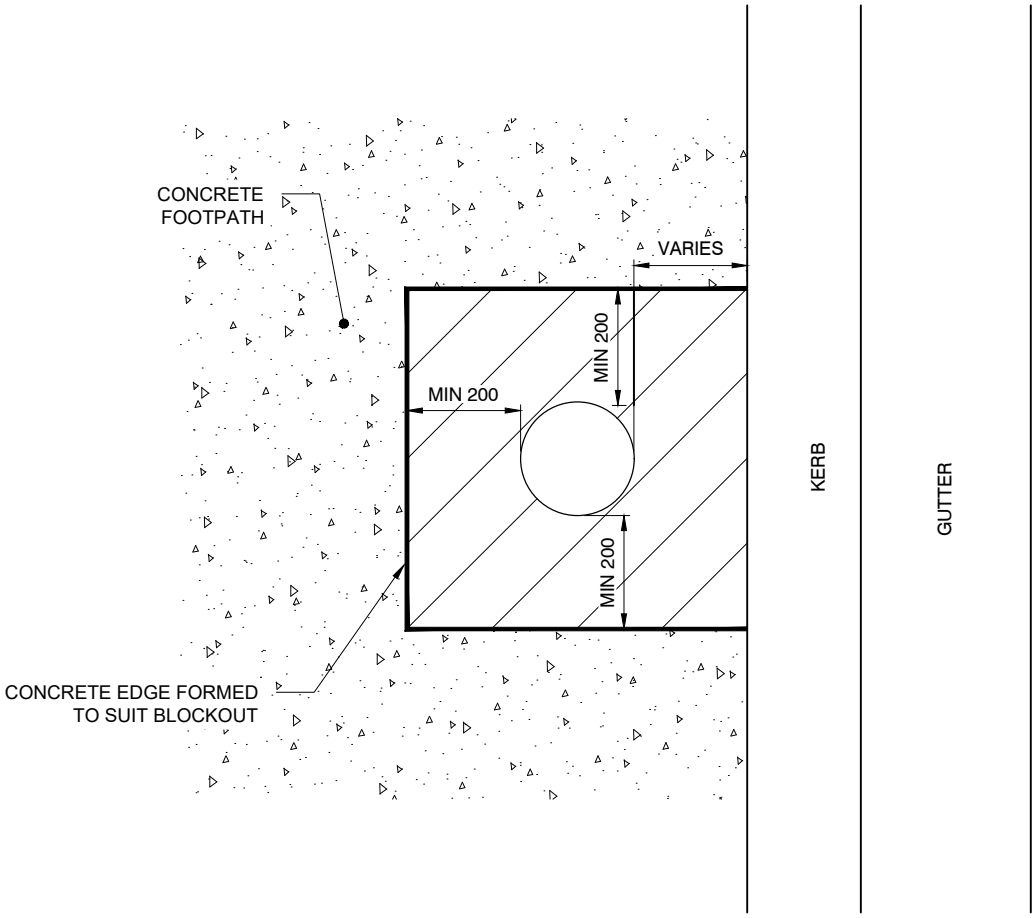

PLAN 1:20

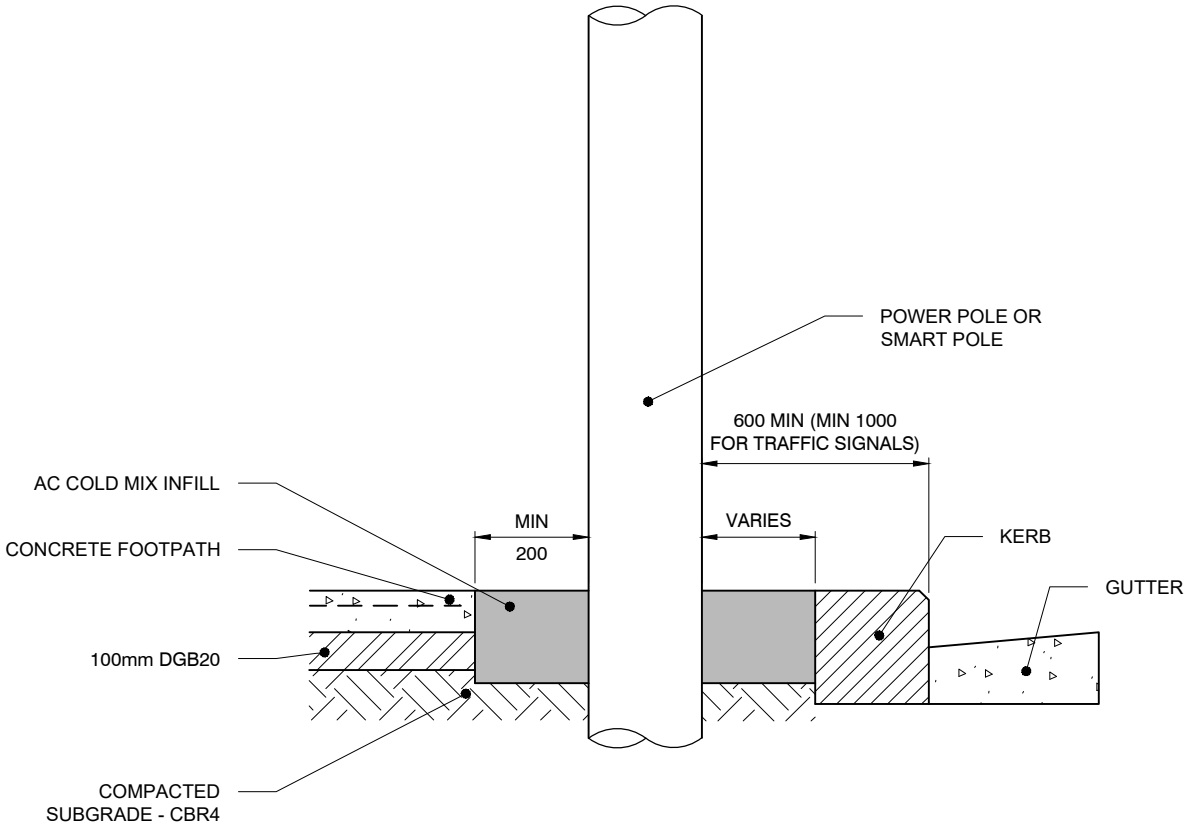

SECTION 1:20

NOTE: ALL DIMENSIONS IN MILLIMETRES UNLESS OTHERWISE STATED

CITY OF SYDNEY	CONCRETE PAVING PAVING AROUND LIGHT POLES AND SMARTPOLES	FOOTWAYS **Rev** D **Date** *01.12.19* **Approved** P S	Dwg No. 2.6.7

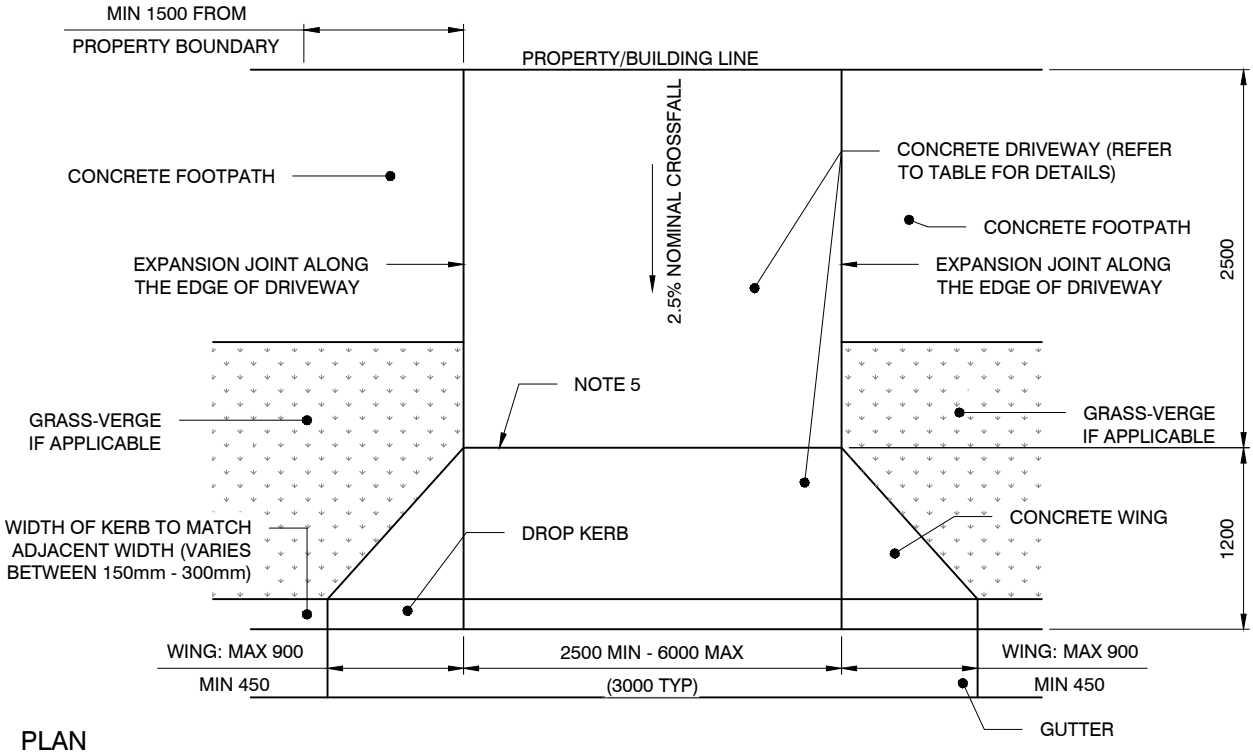

PLAN
1:50

NOTES:

1. DRIVEWAY TO BE GENERALLY PERPENDICULAR TO KERB LINE, UNLESS APPROVED OTHERWISE.
2. VERTICAL AND HORIZONTAL CLEARANCE SHALL BE CHECKED BY THE DESIGNER IN ACCORDANCE WITH AS2890.1.
3. FOR NARROW FOOTPATHS LENGTH OF LAYBACK TO BE AS SHORT AS POSSIBLE, SUBJECT TO VEHICLE CLEARANCE OR LAYBACK ONLY TO BE USED IN APPROVED APPLICATIONS.
4. FOR DRIVEWAYS WIDER THAN 6.0m A TOOL JOINT SHALL BE PROVIDED ALONG THE CENTRE OF THE DRIVEWAY.
5. PROVIDE CONTRACTION/ CONTROL JOINT AT CHANGE IN GRADE AND IN LINE WITH FOOTPATH
6. DRIVEWAY CONCRETE SHALL BE WOOD FLOAT FINISHED.
7. ALL DIMENSIONS IN MILLIMETRES UNLESS OTHERWISE STATED.

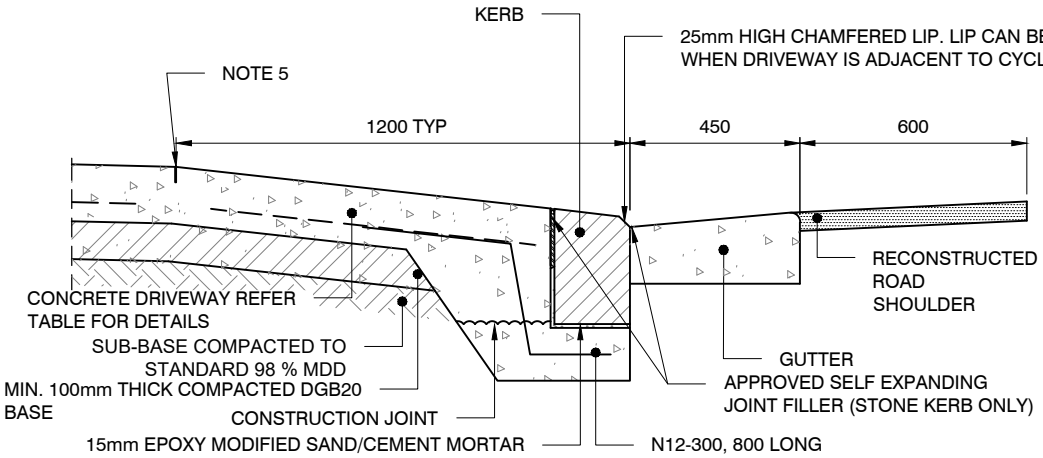

SECTION (STONE KERB)
1:20

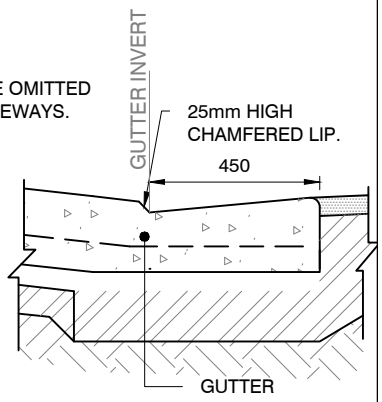

SECTION (CONCRETE KERB)
1:20

DRIVEWAY SPECIFICATIONS			
DRIVEWAY USE	CONCRETE STRENGTH	THICKNESS	REINFORCEMENT
SINGLE RESIDENTIAL	32MPa	150	SL82, 50 TOP COVER
MULTI RESIDENTIAL	32MPa	200	SL82, 50 TOP COVER
COMMERCIAL/ INDUSTRIAL	32MPa	250	TWO LAYERS SL82 50 COVER TOP & BOTTOM

CITY OF SYDNEY

CONCRETE PAVING

VEHICULAR CROSSING

FOOTWAYS

Rev E
Date *16.11.22*
Approved S A

Dwg No.
2.6.8