PLAN

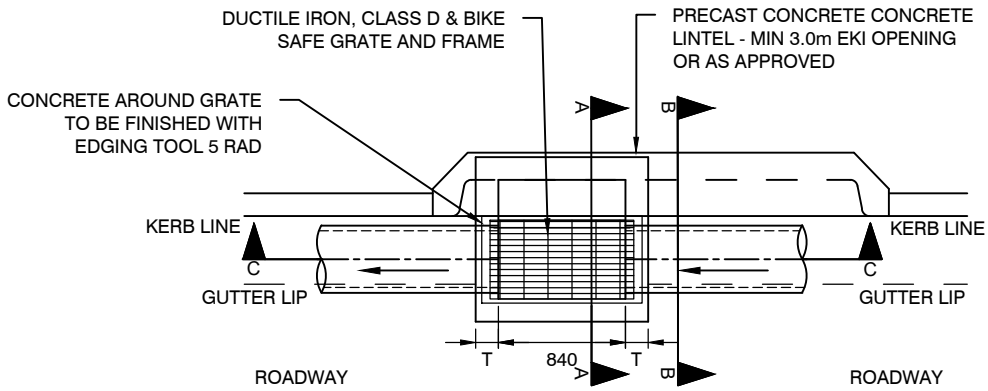

SECTION B-B

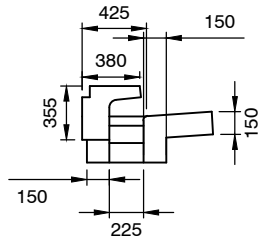

SECTION C-C

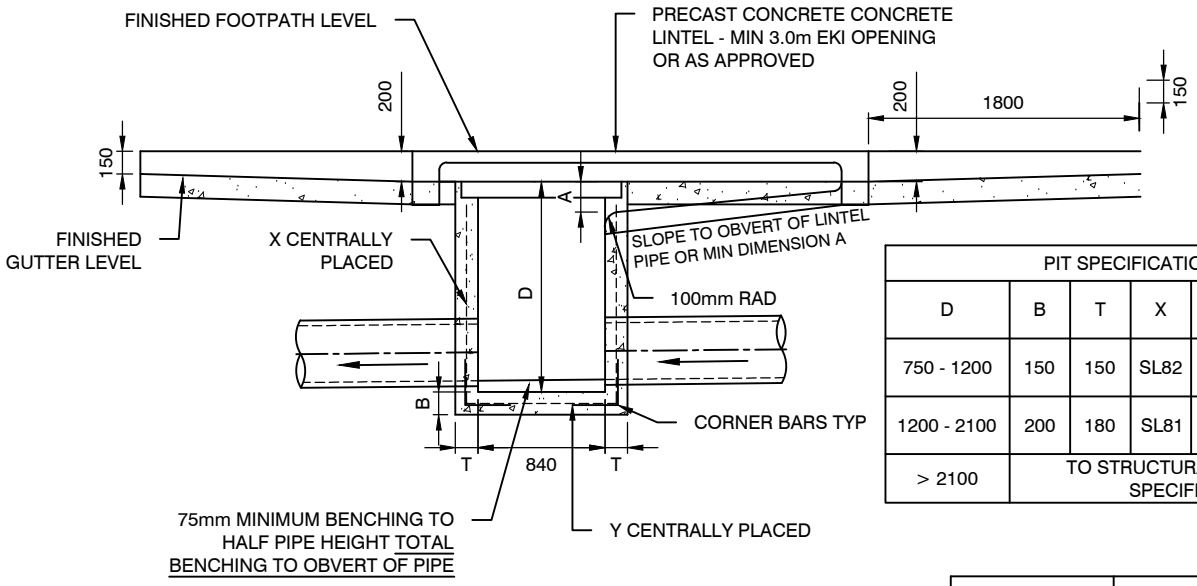

PIT SPECIFICATIONS					
D	B	T	X	Y	CORNER BARS
750 - 1200	150	150	SL82	SL81	N12-300 L 500
1200 - 2100	200	180	SL81	SL81	N12-200 L 600
> 2100	TO STRUCTURAL ENGINEERS SPECIFICATION				

INLET LENGTH - EKI (m)	MINIMUM DIMENSION A (mm)
1.8	250
2.4	300
3.0	400
3.6	450
4.2	500

SECTION A-A

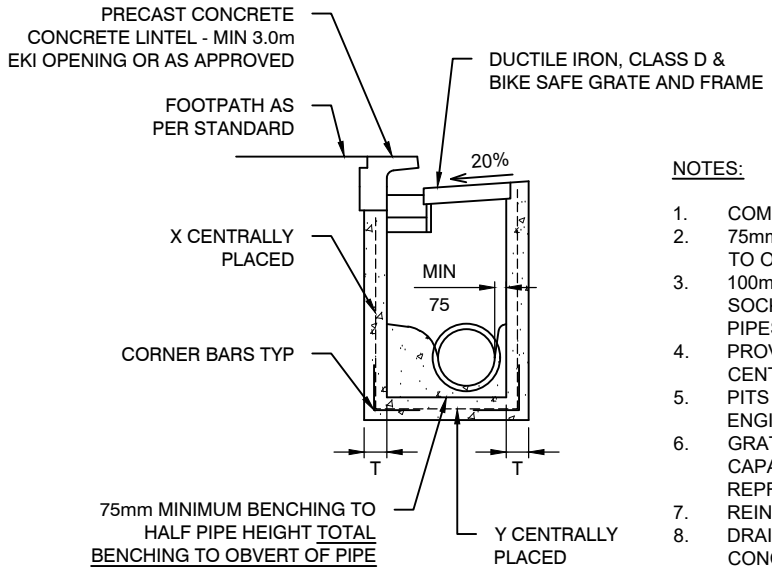

NOTES:

1. COMPRESSIVE STRENGTH OF CONCRETE AT 28 DAYS TO BE 32MPa.
2. 75mm MINIMUM BENCHING TO HALF PIPE HEIGHT TOTAL BENCHING TO OBVERT OF PIPE.
3. 100mmØ SUBSOIL DRAINAGE PIPE 3.0m LONG WRAPPED IN FABRIC SOCK TO BE PROVIDED IN PIPE TRENCHES ADJACENT TO INLET PIPES.
4. PROVIDE STEP IRONS WHERE PIT IS DEEPER THAN 1.0m AT 300mm CENTRES.
5. PITS OVER 2.1m IN DEPTH TO BE DESIGNED BY STRUCTURAL ENGINEER.
6. GRATES SHALL BE BICYCLE SAFE AND HAVE MAXIMUM INLET CAPACITY. ALL GRATES MUST BE APPROVED BY THE CITY'S REPRESENTATIVE.
7. REINFORCEMENT TO COMPLY WITH AS 1302, 1303 & 1304.
8. DRAINAGE PIPE TO BE MINIMUM 375Ø CLASS 4 REINFORCED CONCRETE PIPE

SCALE 1:50

NOTE: ALL DIMENSIONS IN MILLIMETRES UNLESS OTHERWISE STATED

CITY OF SYDNEY

PITS & PIPES

STANDARD GULLY PIT WITH EXTENDED KERB INLET

DRAINAGE

Rev	D
Date	*01.12.19*
Approved	P G

Dwg No. 7.1.1

PLAN

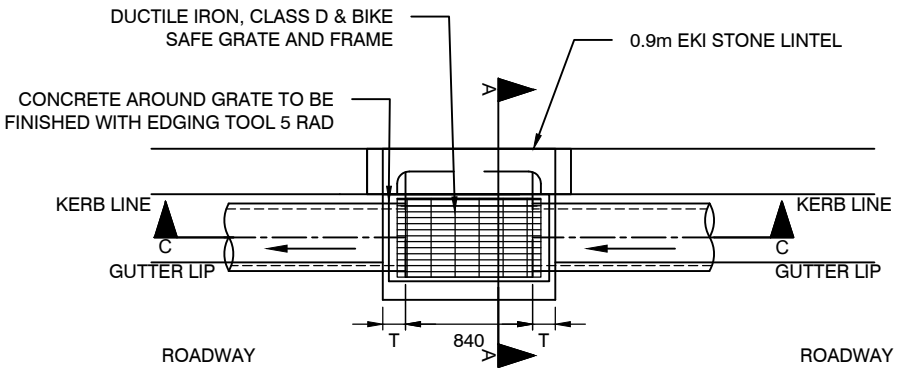

SECTION B-B

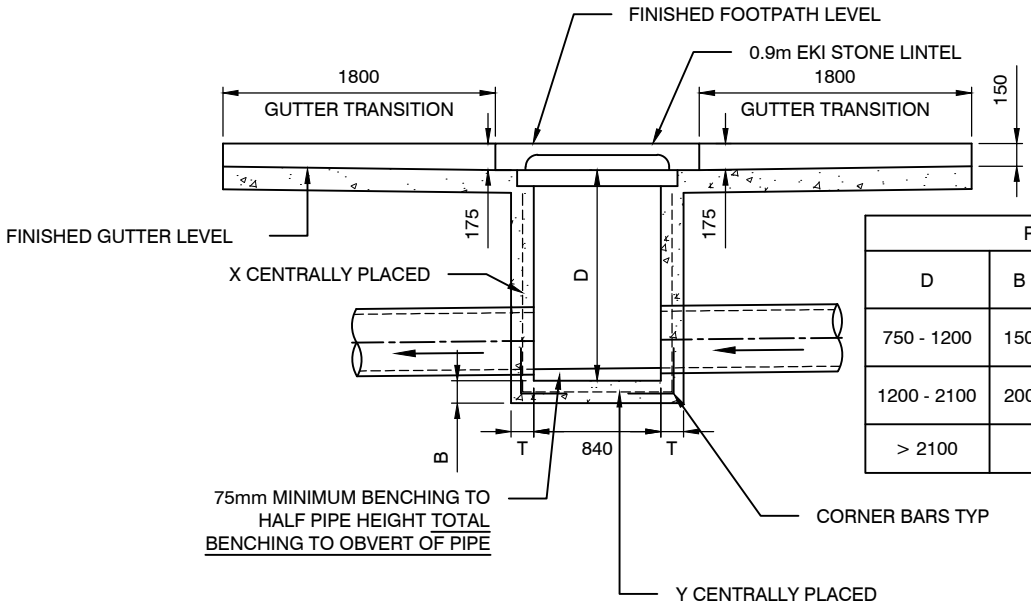

PIT SPECIFICATIONS					
D	B	T	X	Y	CORNER BARS
750 - 1200	150	150	SL82	SL81	N12-300 L 500
1200 - 2100	200	180	SL81	SL81	N12-200 L 600
> 2100	TO STRUCTURAL ENGINEERS SPECIFICATION				

SECTION A-A

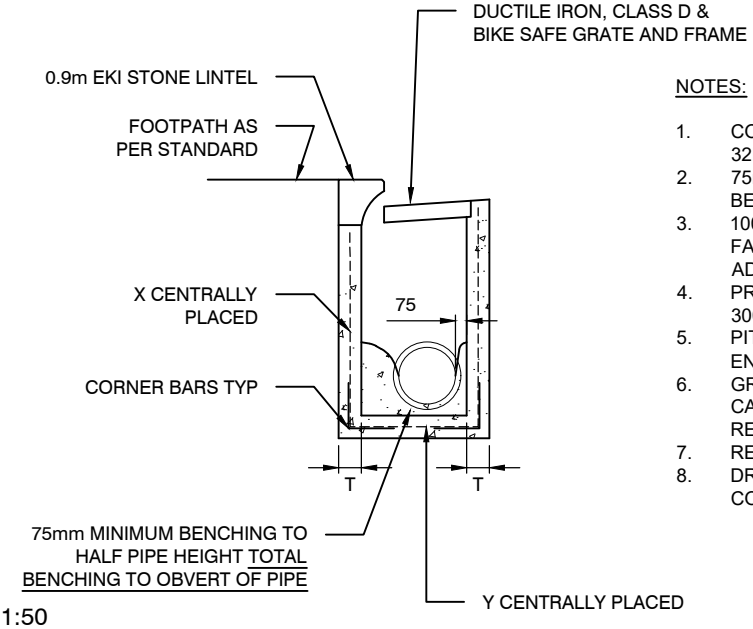

SCALE 1:50

NOTES:

1. COMPRESSIVE STRENGTH OF CONCRETE AT 28 DAYS TO BE 32MPa.
2. 75mm MINIMUM BENCHING TO HALF PIPE HEIGHT TOTAL BENCHING TO OBVERT OF PIPE.
3. 100mmØ SUBSOIL DRAINAGE PIPE 3.0m LONG WRAPPED IN FABRIC SOCK TO BE PROVIDED IN PIPE TRENCHES ADJACENT TO INLET PIPES.
4. PROVIDE STEP IRONS WHERE PIT IS DEEPER THAN 1.0m AT 300mm CENTRES
5. PITS OVER 2.1m IN DEPTH TO BE DESIGNED BY STRUCTURAL ENGINEER.
6. GRATES SHALL BE BICYCLE SAFE AND HAVE MAXIMUM INLET CAPACITY. ALL GRATES MUST BE APPROVED BY THE CITY'S REPRESENTATIVE.
7. REINFORCEMENT TO COMPLY WITH AS1302, 1303 & 1304.
8. DRAINAGE PIPE TO BE MINIMUM 375Ø CLASS 4 REINFORCED CONCRETE PIPE

NOTE: ALL DIMENSIONS IN MILLIMETRES UNLESS OTHERWISE STATED

CITY OF SYDNEY

PITS & PIPES

STANDARD GULLY PIT WITH STONE INLET

DRAINAGE

Rev D
Date *01.12.19*
Approved P S

Dwg No. 7.1.2

PLAN

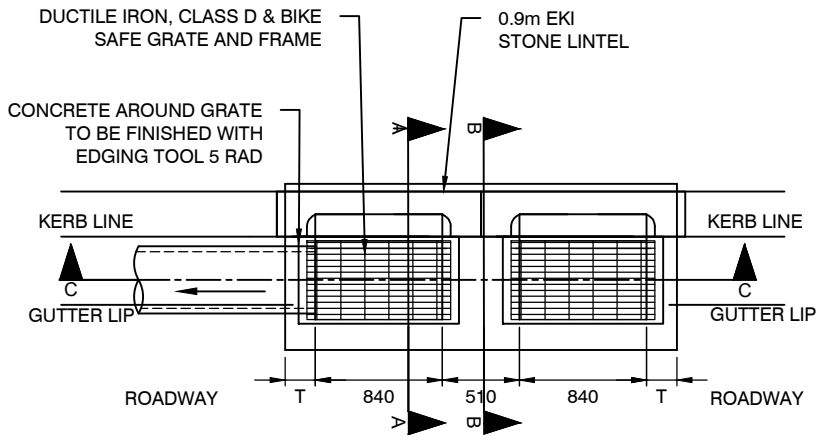

NOTES:

1. ALL LIGATURES TO BE R6 WITH DIMENSIONS AS SPECIFIED.
2. ALL REINFORCEMENT TO COMPLY WITH AS1302, 1303 & 1304.
3. COMPRESSIVE STRENGTH OF CONCRETE AT 28 DAYS TO BE 32MPa.
4. 75mm MINIMUM BENCHING TO HALF PIPE HEIGHT TOTAL BENCHING TO OBVERT OF PIPE.
5. 100mmØ SUBSOIL DRAINAGE PIPE 3.0m LONG WRAPPED IN FABRIC SOCK TO BE PROVIDED IN PIPE TRENCHES ADJACENT TO INLET PIPES.
6. PROVIDE STEP IRONS WHERE PIT IS DEEPER THAN 1.0m AT 300mm CENTRES.
7. PITS OVER 2.1m IN DEPTH TO BE DESIGNED BY STRUCTURAL ENGINEER.
8. GRATES SHALL BE BICYCLE SAFE AND HAVE MAXIMUM INLET CAPACITY. ALL GRATES MUST BE APPROVED BY THE CITY'S REPRESENTATIVE.
9. DRAINAGE PIPE TO BE MINIMUM 375Ø CLASS 4 REINFORCED CONCRETE PIPE

SECTION C-C

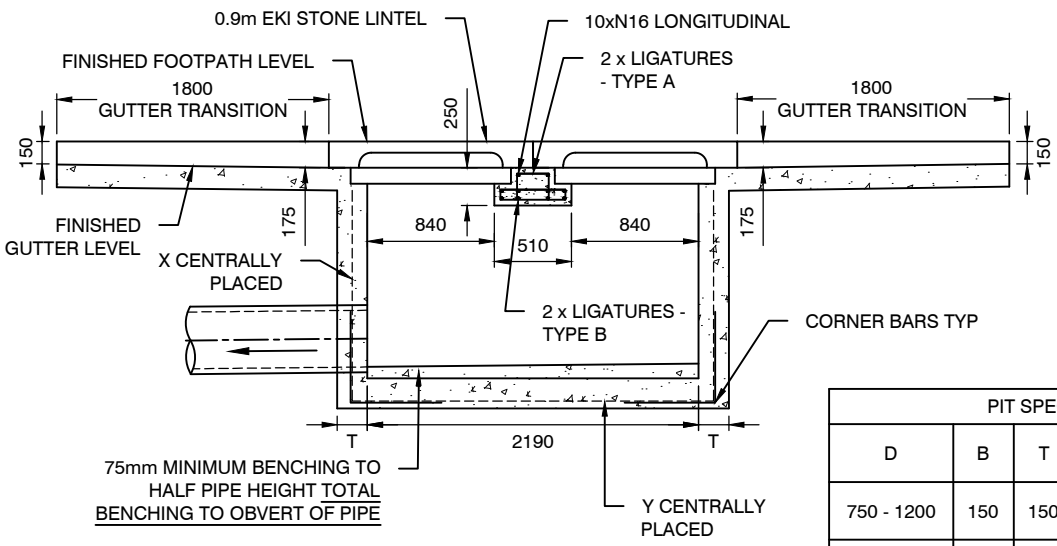

LIGATURES TYPE A

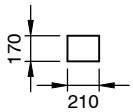

LIGATURES TYPE B

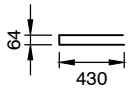

PIT SPECIFICATIONS					
D	B	T	X	Y	CORNER BARS
750 - 1200	150	150	SL82	SL81	N12-300 L 500
1200 - 2100	200	180	SL81	SL81	N12-200 L 600
> 2100	TO STRUCTURAL ENGINEERS SPECIFICATION				

SECTION A-A

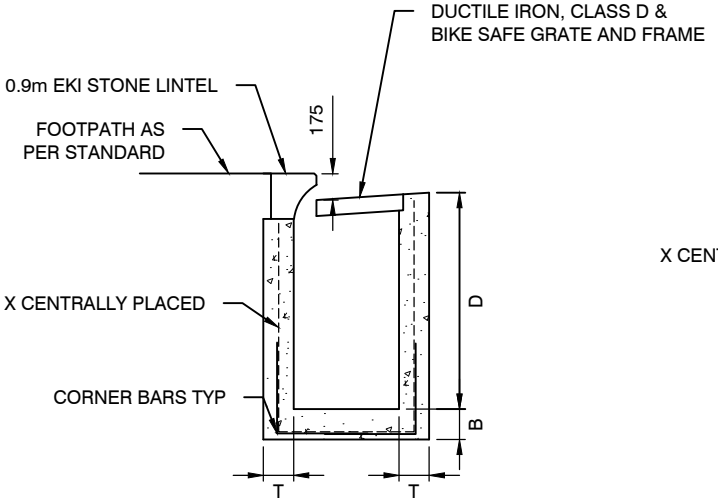

SECTION B-B

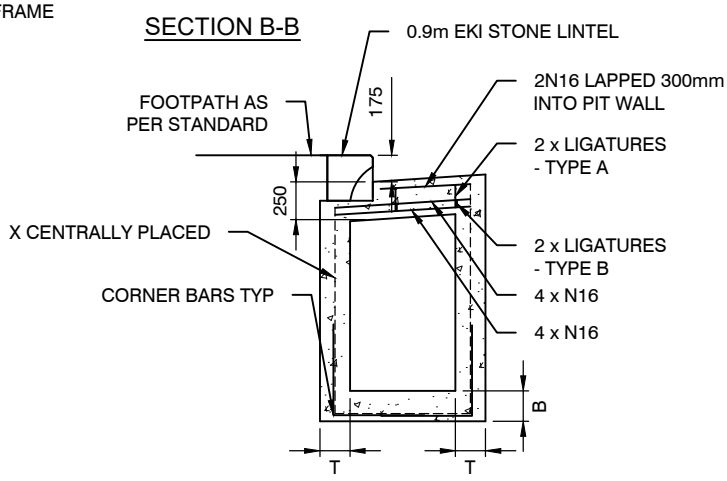

SCALE 1:50

NOTE: ALL DIMENSIONS IN MILLIMETRES UNLESS OTHERWISE STATED

CITY OF SYDNEY

PITS & PIPES

DOUBLE GRATE/LINTEL PIT WITH STONE INLET

DRAINAGE

Rev	D
Date	01.12.19
Approved	P S

Dwg No. 7.1.3

PLAN

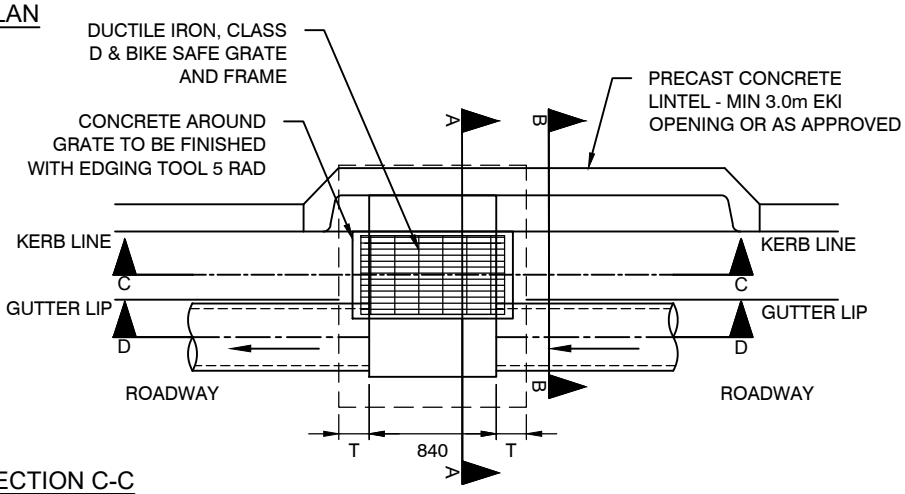

SECTION B-B

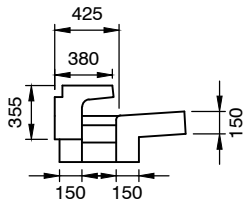

SECTION C-C

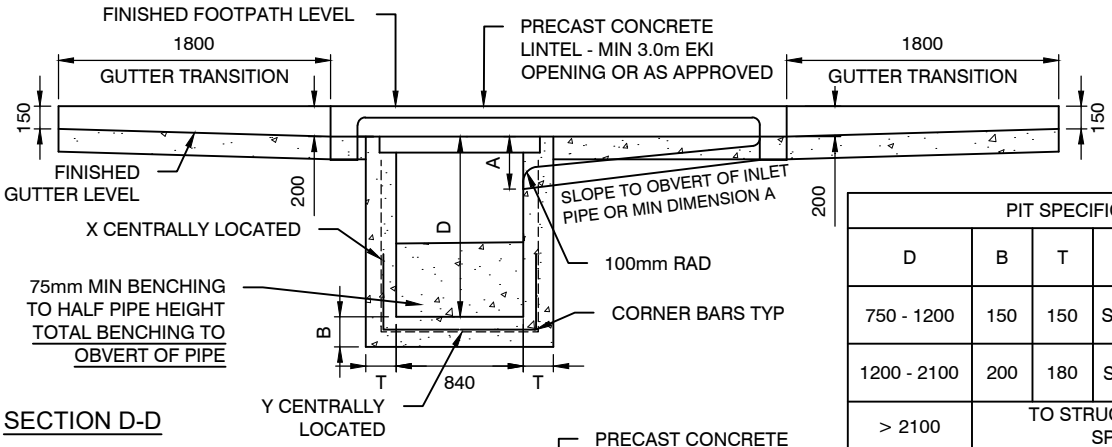

PIT SPECIFICATIONS					
D	B	T	X	Y	CORNER BARS
750 - 1200	150	150	SL82	SL81	N12-300 L 500
1200 - 2100	200	180	SL81	SL81	N12-200 L 600
> 2100	TO STRUCTURAL ENGINEERS SPECIFICATION				

SECTION D-D

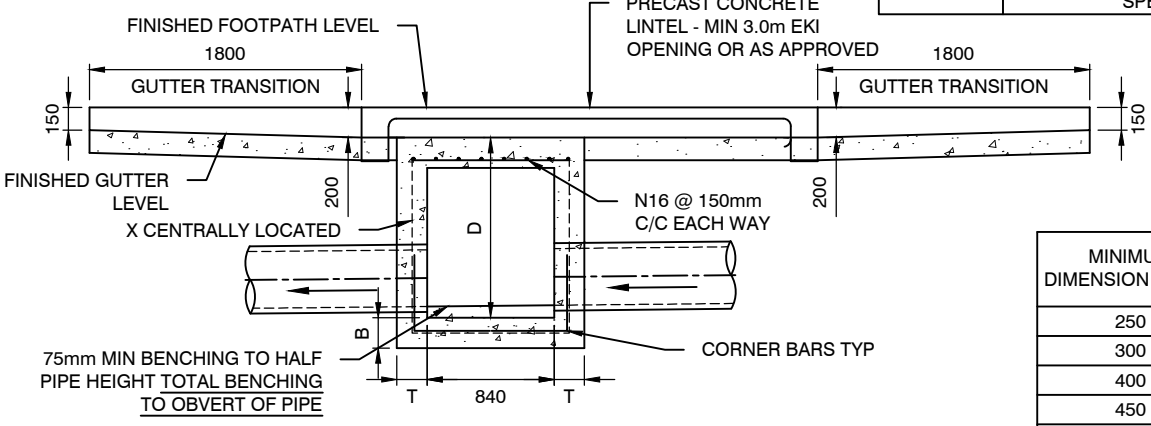

MINIMUM DIMENSION A (mm)	INLET LENGHT - EKI (m)
250	1.8
300	2.4
400	3.0
450	3.6
500	4.2

SECTION A-A

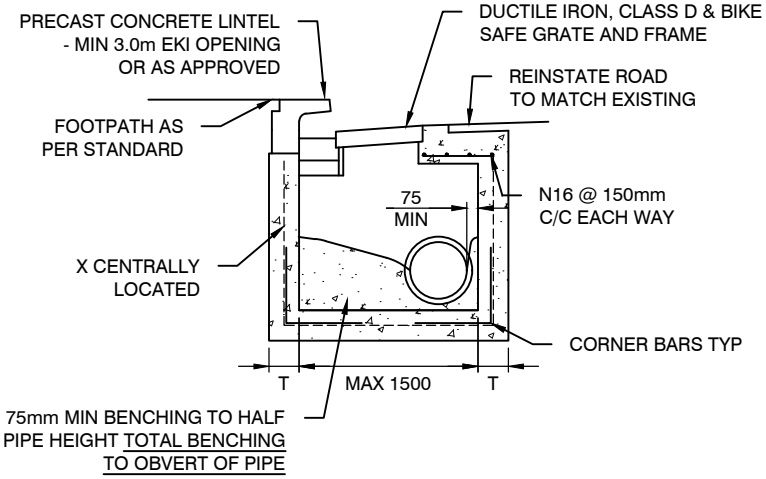

NOTES:

1. COMPRESSIVE STRENGTH OF CONCRETE AT 28 DAYS TO BE 32MPa.
2. 75mm MINIMUM BENCHING TO HALF PIPE HEIGHT TOTAL BENCHING TO OBVERT OF PIPE.
3. 100mmØ SUBSOIL DRAINAGE PIPE 3.0m LONG WRAPPED IN FABRIC SOCK TO BE PROVIDED IN PIPE TRENCHES ADJACENT TO INLET PIPES.
4. PROVIDE STEP IRONS WHERE PIT IS DEEPER THAN 1.0m AT 300mm CENTRES.
5. PITS OVER 2.1m IN DEPTH TO BE DESIGNED BY STRUCTURAL ENGINEER.
6. GRATES SHALL BE BICYCLE SAFE AND HAVE MAXIMUM INLET CAPACITY. ALL GRATES MUST BE APPROVED BY THE CITY'S REPRESENTATIVE.
7. REINFORCEMENT TO COMPLY WITH AS1302, 1303 & 1304.
8. DRAINAGE PIPE TO BE MINIMUM 375Ø CLASS 4 REINFORCED CONCRETE PIPE

SCALE 1:50

NOTE: ALL DIMENSIONS IN MILLIMETRES UNLESS OTHERWISE STATED

CITY OF SYDNEY

PITS & PIPES

STANDARD EXTENDED GULLY PIT

DRAINAGE

Rev D
Date 01.12.19
Approved P S

Dwg No. 7.1.4

PLAN

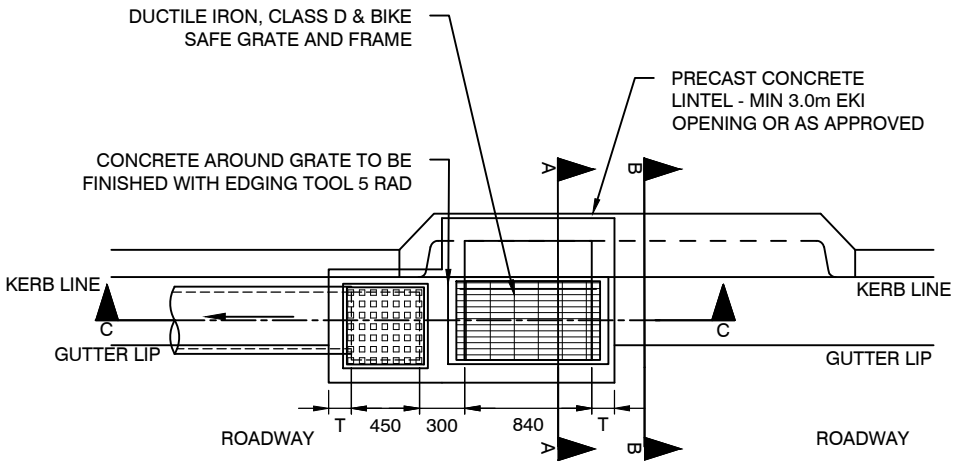

SECTION B-B

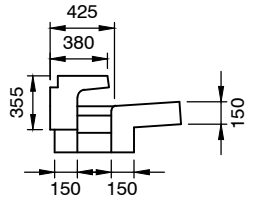

SECTION C-C

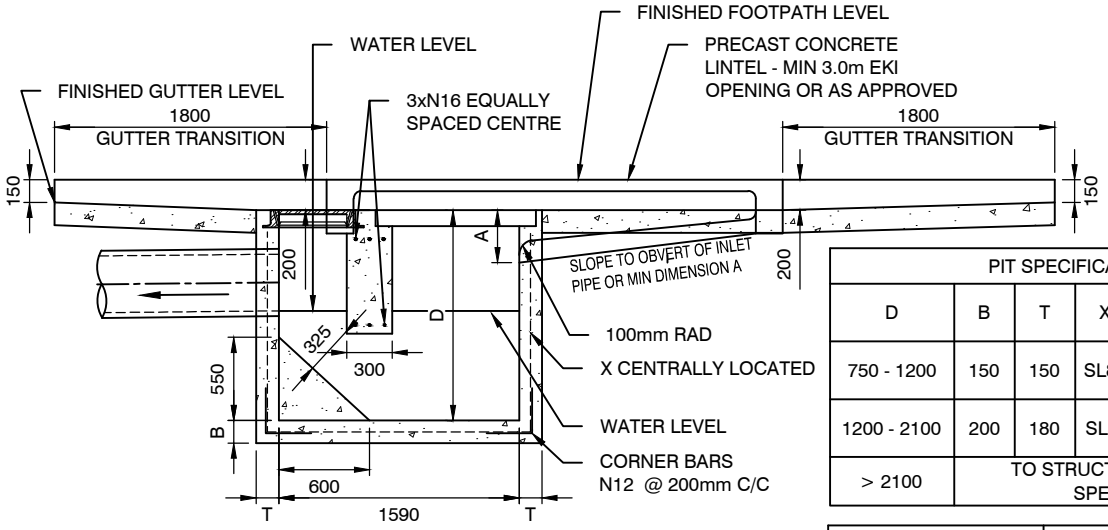

PIT SPECIFICATIONS					
D	B	T	X	Y	CORNER BARS
750 - 1200	150	150	SL82	SL81	N12-300 L 500
1200 - 2100	200	180	SL81	SL81	N12-200 L 600
> 2100	TO STRUCTURAL ENGINEERS SPECIFICATION				

MINIMUM DIMENSION A (mm)	INLET LENGHT - EKI (m)
250	1.8
300	2.4
400	3.0
450	3.6
500	4.2

SECTION A-A

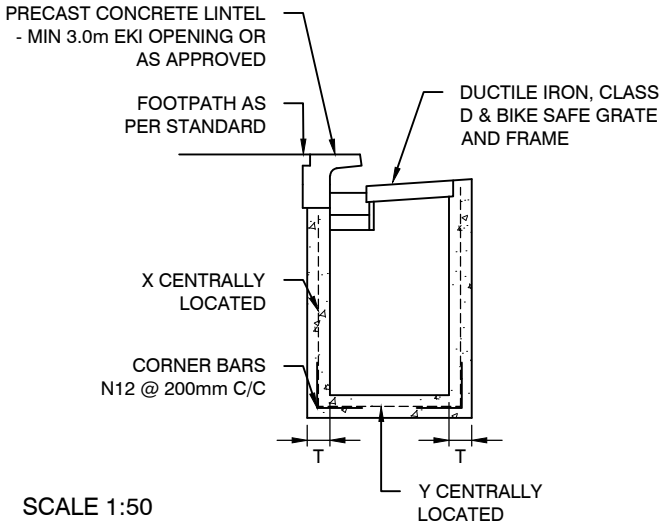

SCALE 1:50

NOTES:

1. COMPRESSIVE STRENGTH OF CONCRETE AT 28 DAYS TO BE 32MPa.
2. 75mm MINIMUM BENCHING TO HALF PIPE HEIGHT TOTAL BENCHING TO OBVERT OF PIPE.
3. 100mmØ SUBSOIL DRAINAGE PIPE 3.0m LONG WRAPPED IN FABRIC SOCK TO BE PROVIDED IN PIPE TRENCHES ADJACENT TO INLET PIPES.
4. PROVIDE STEP IRONS WHERE PIT IS DEEPER THAN 1.0m AT 300mm CENTRES.
5. PITS OVER 2.1m IN DEPTH TO BE DESIGNED BY STRUCTURAL ENGINEER.
6. GRATES SHALL BE BICYCLE SAFE AND HAVE MAXIMUM INLET CAPACITY. ALL GRATES MUST BE APPROVED BY THE CITY'S REPRESENTATIVE.
7. REINFORCEMENT TO COMPLY WITH AS 1302, 1303 & 1304.
8. DRAINAGE PIPE TO BE MINIMUM Ø375 CLASS 4 REINFORCED CONCRETE PIPE

NOTE: ALL DIMENSIONS IN MILLIMETRES UNLESS OTHERWISE STATED

CITY OF SYDNEY

PITS & PIPES

TRAPPED GULLY PIT WITH EXTENDED KERB INLET

DRAINAGE

Rev D
Date *01.12.19*
Approved P S

Dwg No. 7.1.5

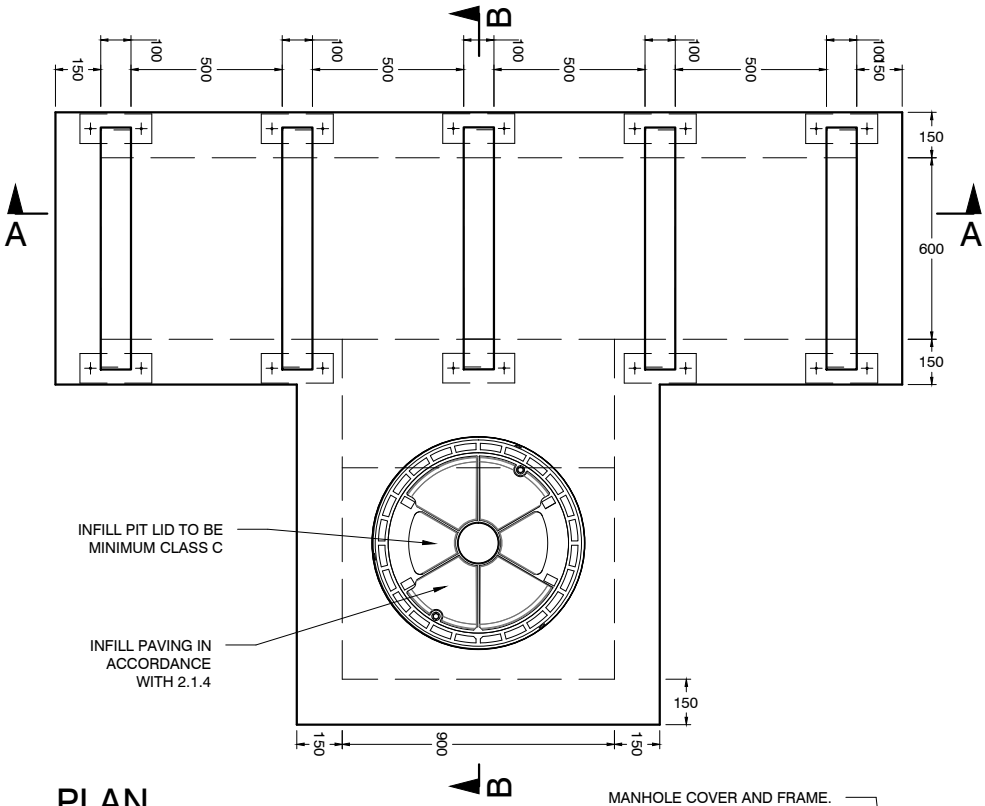

PLAN
1:25

NOTES:

1. THIS DRAWING IS TO BE READ IN CONJUNCTION WITH DWG 2.1.4 & 2.1.17
2. ALL REINFORCEMENT TO COMPLY WITH AS46714
3. ALL REINFORCEMENT TO BE GRADE 500
4. COMPRESSIVE STRENGTH OF CONCRETE AT 28 DAYS TO BE 32MPa.
5. ALL REINFORCEMENT SHALL BE PLACED IN MID-SECTION UNO. OTHERWISE MIN CONCRETE COVER SHALL BE 40mm - B1 COVER
6. FOR ANY PENETRATION THROUGH WALLS AND SLABS GREATER THAN 200 SPACING, PROVIDE N12 TRIMMER BARS AND ADDITIONAL N12 REPLACEMENT BARS ON EACH SIDE.
7. LAP LENGTH IS TO BE MINIMUM 40 x BAR Ø UNLESS NOTED OTHERWISE.
8. 75mm MINIMUM BENCHING TO HALF PIPE HEIGHT TOTAL BENCHING TO OBVERT OF PIPE.
9. 100mmØ SUBSOIL DRAINAGE PIPE 3.0m LONG WRAPPED IN FABRIC SOCK TO BE PROVIDED IN PIPE TRENCHES ADJACENT TO INLET PIPES.
10. PROVIDE STEP IRONS WHERE PIT IS DEEPER THAN 1.0m AT 300mm CENTRES.
11. GRATES SHALL BE BICYCLE SAFE AND HAVE MAXIMUM INLET CAPACITY. ALL GRATES MUST BE APPROVED BY THE CITY'S REPRESENTATIVE.
12. DRAINAGE PIPE TO BE MINIMUM 375Ø CLASS 4 REINFORCED CONCRETE PIPE

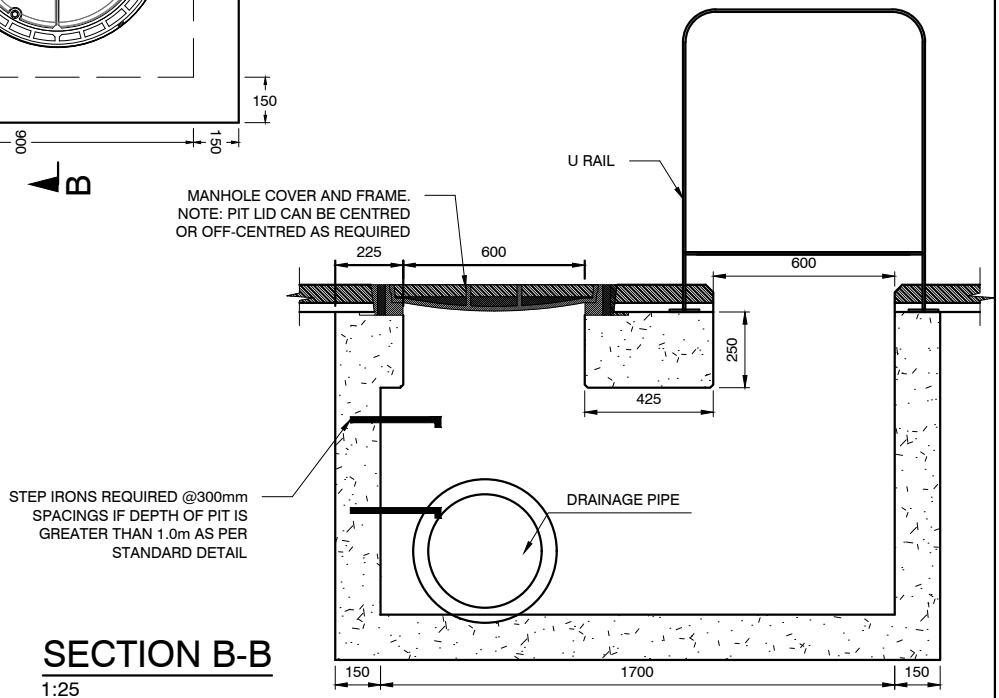

SECTION B-B
1:25

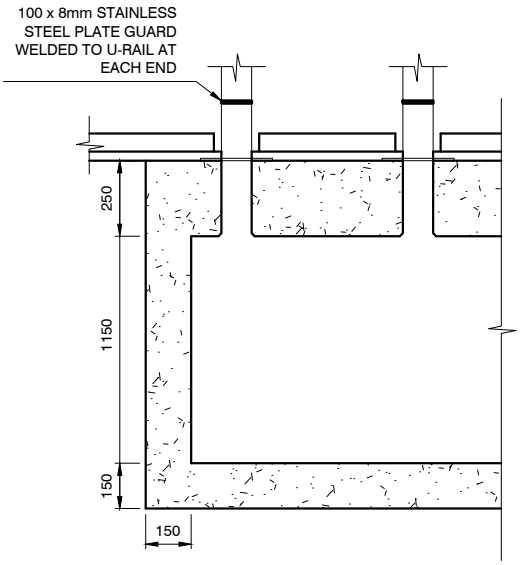

SECTION A-A
1:25

NOTE: ALL DIMENSIONS IN MILLIMETRES UNLESS OTHERWISE STATED

CITY OF SYDNEY

PITS & PIPES
SLOTTED INLET DRAIN UNDER BICYCLE PARKING LAYOUT

DRAINAGE

Rev	D	Dwg No.
Date	01.12.19	7.1.16
Approved	P S	

MANHOLE COVER AND FRAME

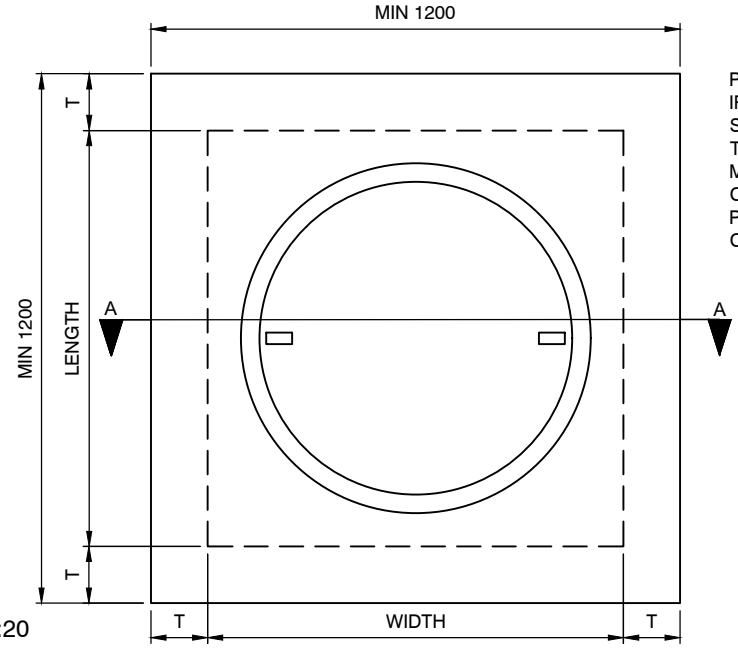

PLAN 1:20

PIT LID IS A CLASS D DUCTILE IRON HINGED LID WITH A SPRING LOCKING SYSTEM THE LID SHALL BE A KORUM MANHOLE COVER (REF CDK060EFX17) OR SIMILAR PRODUCT APPROVED BY THE CITY.

PIT SPECIFICATIONS					
D	B	T	X	Y	CORNER BARS
750 - 1200	150	150	SL82	SL81	N12-300 L 500
1200 - 2100	200	180	SL81	SL81	N12-200 L 600
> 2100	TO STRUCTURAL ENGINEERS SPECIFICATION				

SECTION A-A

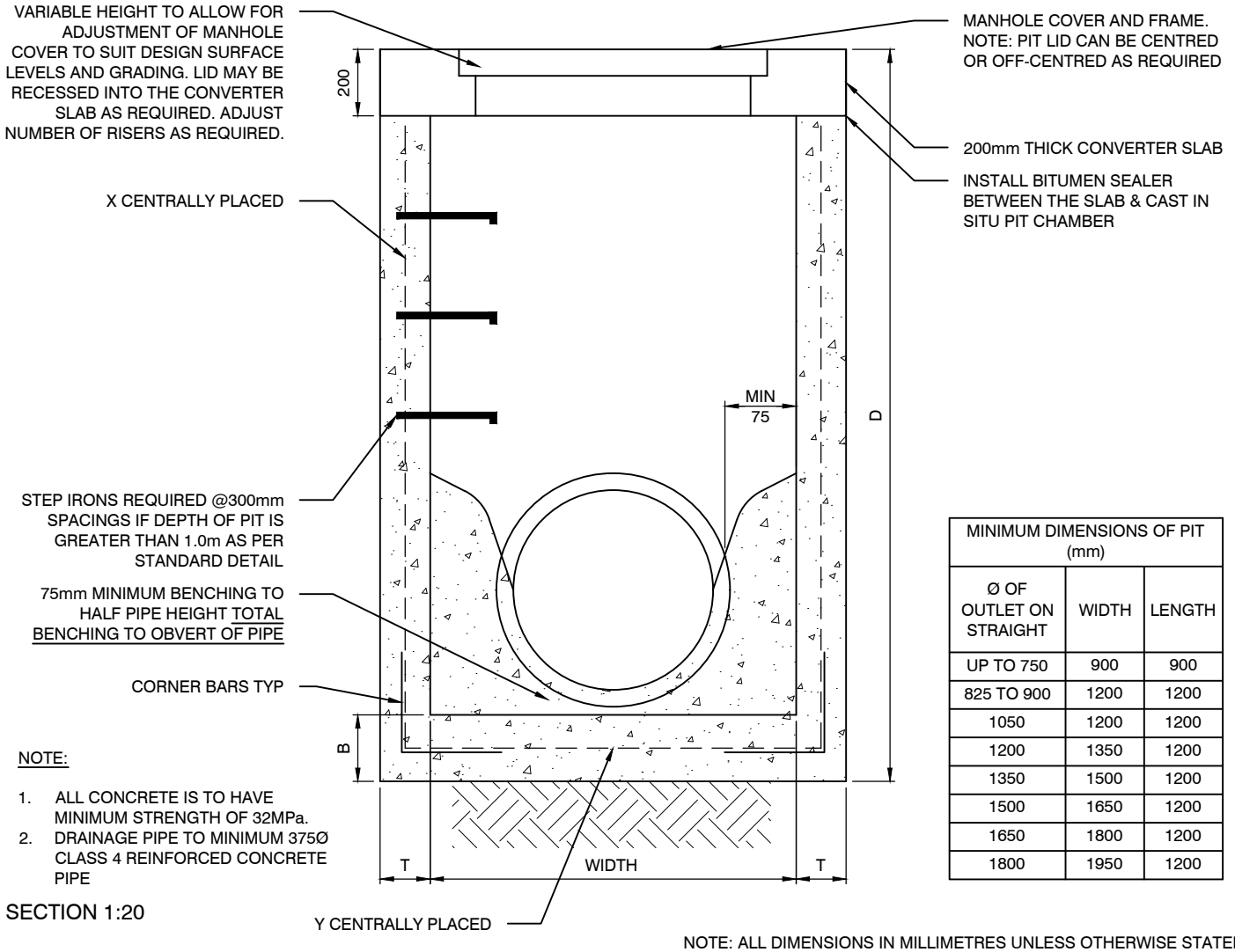

NOTE:

1. ALL CONCRETE IS TO HAVE MINIMUM STRENGTH OF 32MPa.
2. DRAINAGE PIPE TO MINIMUM 375Ø CLASS 4 REINFORCED CONCRETE PIPE

SECTION 1:20

MINIMUM DIMENSIONS OF PIT (mm)		
Ø OF OUTLET ON STRAIGHT	WIDTH	LENGTH
UP TO 750	900	900
825 TO 900	1200	1200
1050	1200	1200
1200	1350	1200
1350	1500	1200
1500	1650	1200
1650	1800	1200
1800	1950	1200

NOTE: ALL DIMENSIONS IN MILLIMETRES UNLESS OTHERWISE STATED

CITY OF SYDNEY

PITS & PIPES

STANDARD JUNCTION PIT

DRAINAGE

Rev D
Date *01.12.19*
Approved P S

Dwg No. 7.1.7

PLAN

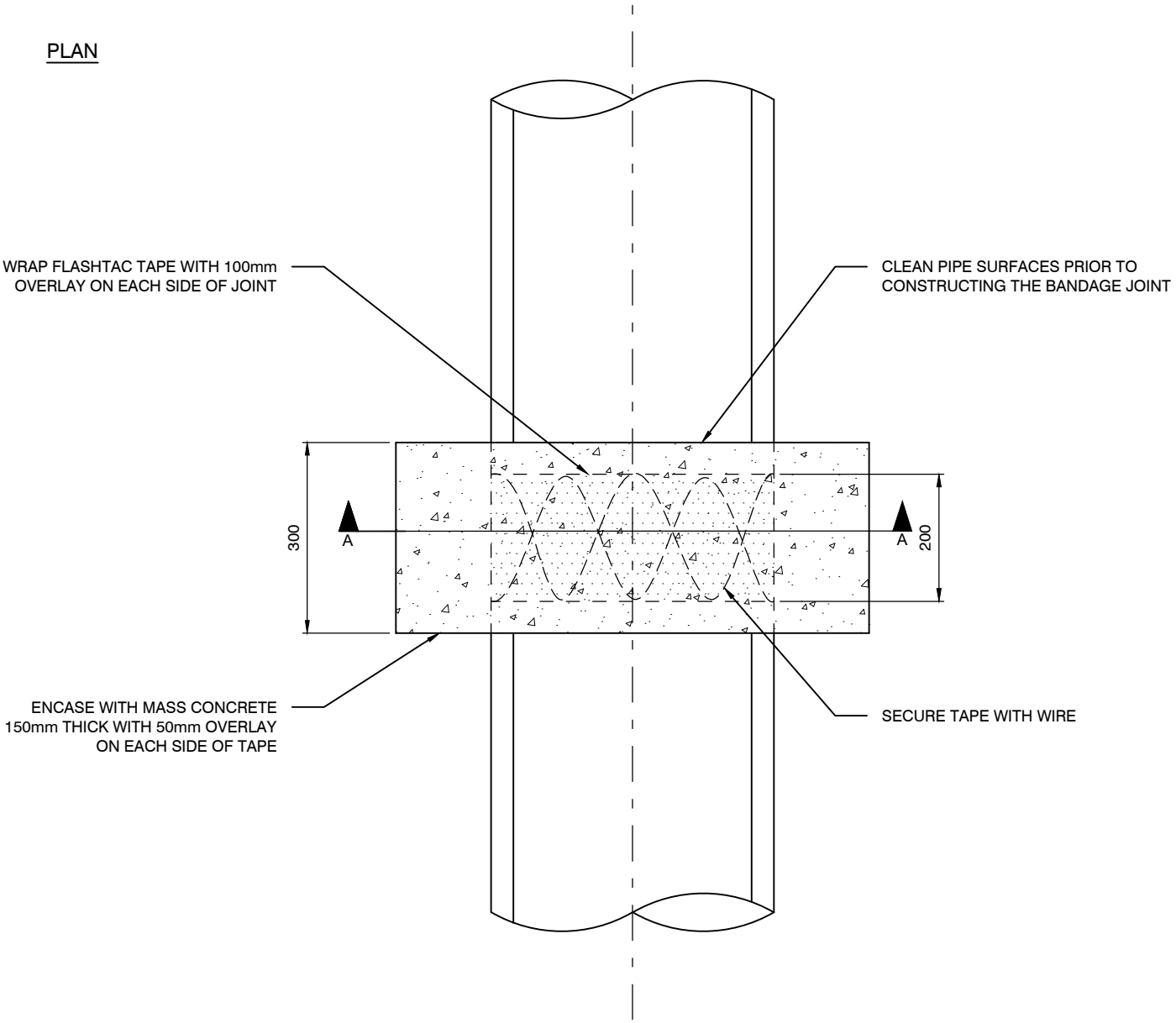

SECTION A-A

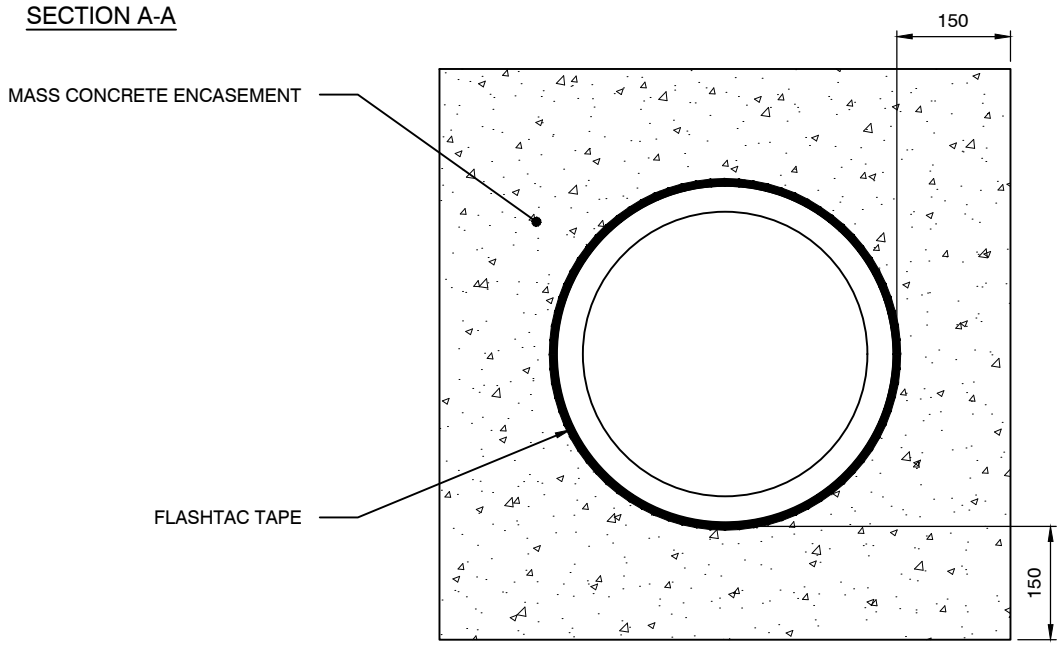

SCALE 1:10

NOTE: ALL DIMENSIONS IN MILLIMETRES UNLESS OTHERWISE STATED

CITY OF SYDNEY	PITS & PIPES BANDAGE JOINT	DRAINAGE **Rev** D **Date** *01.12.19* **Approved** P S Dwg No. 7.1.8

CONCRETE PIPE TRENCH BACKFILL DETAIL

≤ 900mm DIA.

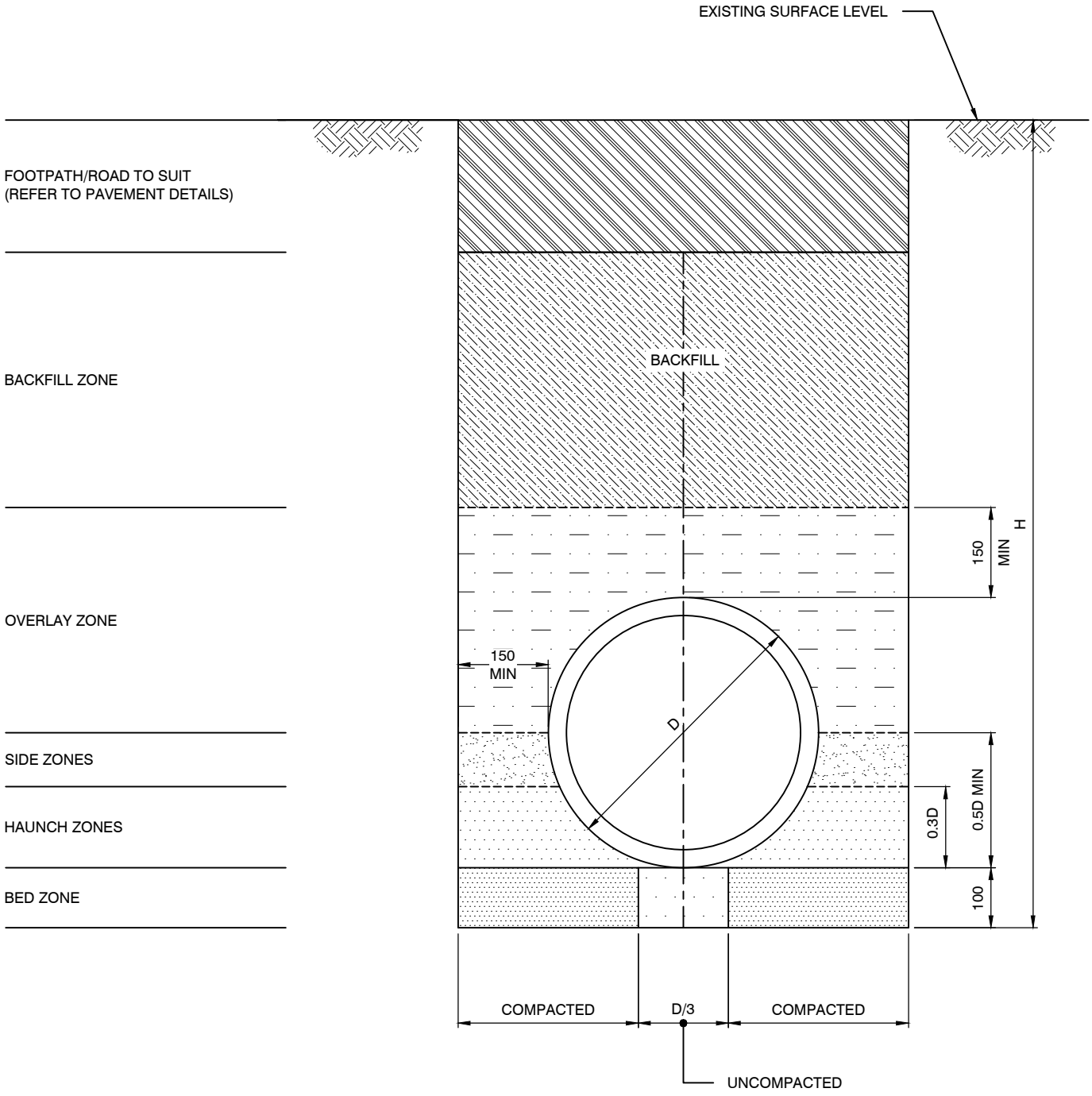

NOTE:
1. DRAINAGE PIPE TO BE MINIMUM 375Ø CLASS 4 REINFORCED CONCRETE PIPE

SECTION 1:10

NOTE: ALL DIMENSIONS IN MILLIMETRES UNLESS OTHERWISE STATED

CITY OF SYDNEY	PITS & PIPES TYPICAL PIPE TRENCH BACKFILL	DRAINAGE **Rev** D **Date** *01.12.19* **Approved** P S	Dwg No. 7.1.9

CONCRETE PIPE TRENCH BACKFILL DETAIL

≤ 900mm DIA.

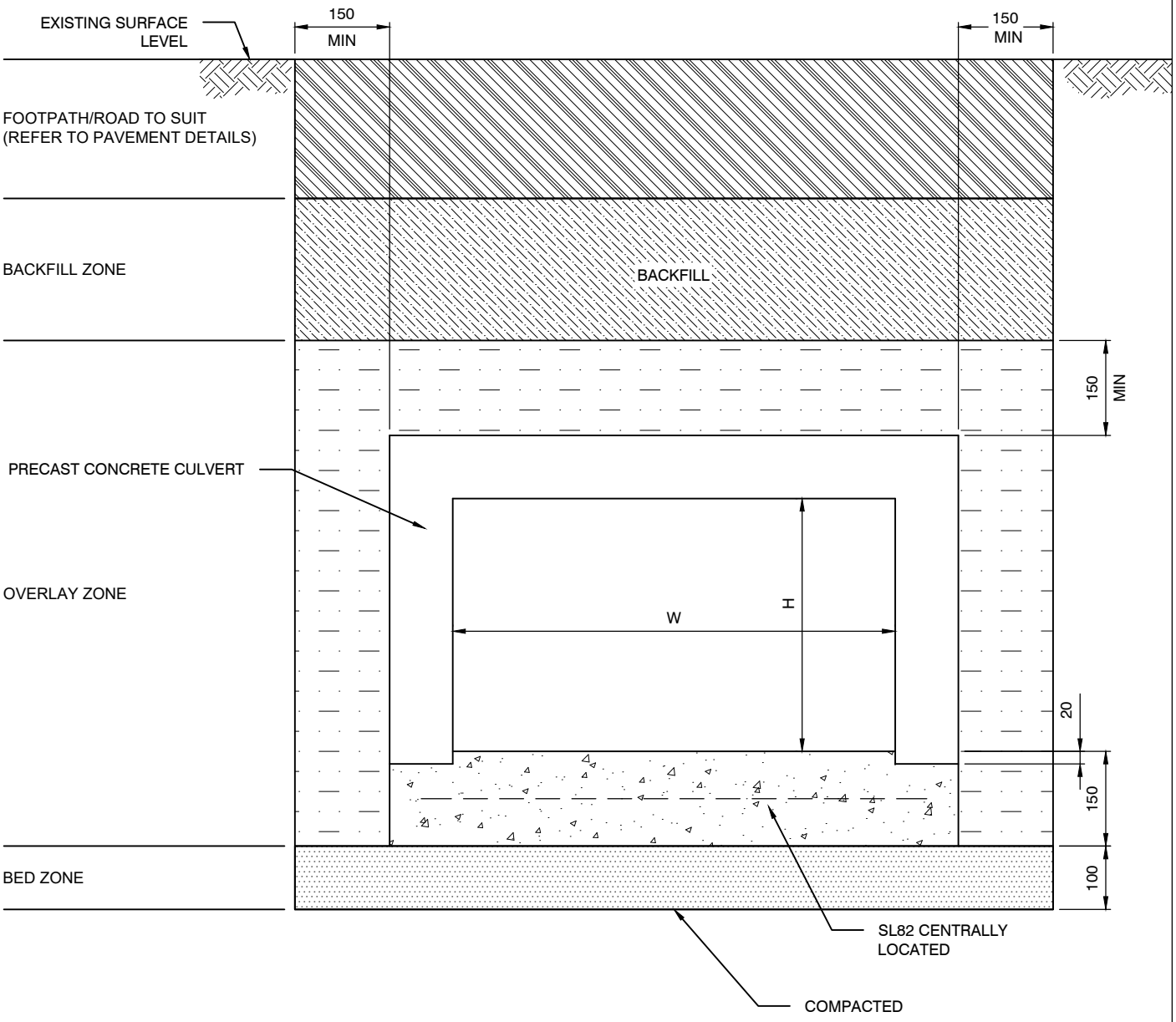

SECTION 1:10

NOTE: ALL DIMENSIONS IN MILLIMETRES UNLESS OTHERWISE STATED

CITY OF SYDNEY	PITS & PIPES TYPICAL CULVERT TRENCH BACKFILL	**Rev** D **Date** *01.12.19* **Approved** P S	DRAINAGE Dwg No. 7.1.10

MANHOLE COVER AND FRAME

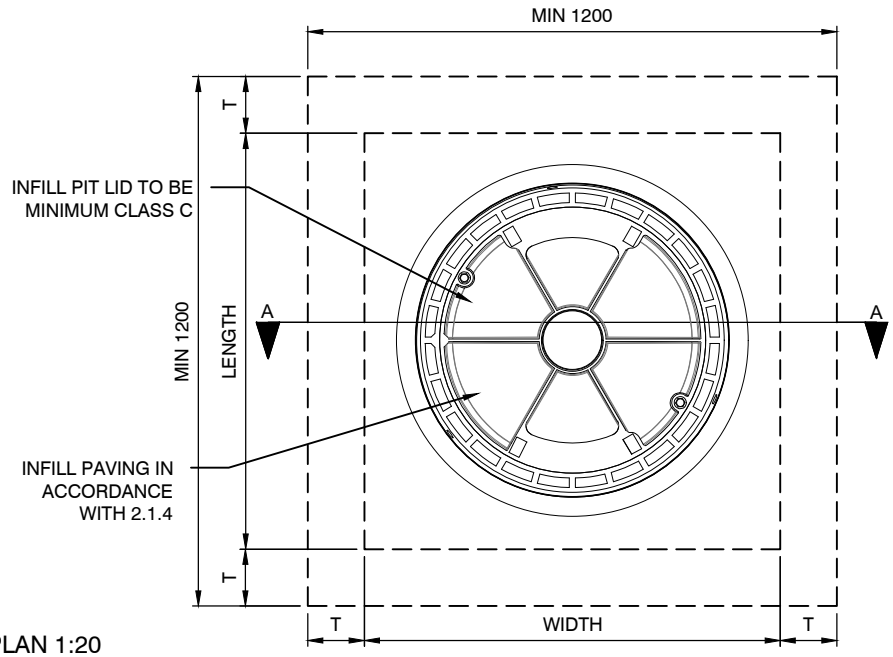

PLAN 1:20

NOTES:

1. ALL REINFORCEMENT TO COMPLY WITH AS46714
2. ALL REINFORCEMENT TO BE GRADE 500
3. COMPRESSIVE STRENGTH OF CONCRETE AT 28 DAYS TO BE 32MPa.
4. ALL REINFORCEMENT SHALL BE PLACED IN MID-SECTION UNO. OTHERWISE MIN CONCRETE COVER SHALL BE 40mm - B1 COVER
5. FOR ANY PENETRATION THROUGH WALLS AND SLABS GREATER THAN 200 SPACING, PROVIDE N12 TRIMMER BARS AND ADDITIONAL N12 REPLACEMENT BARS ON EACH SIDE.
6. LAP LENGTH IS TO BE MINIMUM 40 x BAR Ø UNLESS NOTED OTHERWISE.
7. 75mm MINIMUM BENCHING TO HALF PIPE HEIGHT TOTAL BENCHING TO OBVERT OF PIPE.
8. 100mmØ SUBSOIL DRAINAGE PIPE 3.0m LONG WRAPPED IN FABRIC SOCK TO BE PROVIDED IN PIPE TRENCHES ADJACENT TO INLET PIPES.
9. PROVIDE STEP IRONS WHERE PIT IS DEEPER THAN 1.0m AT 300mm CENTRES.
10. GRATES SHALL BE BICYCLE SAFE AND HAVE MAXIMUM INLET CAPACITY. ALL GRATES MUST BE APPROVED BY THE CITY'S REPRESENTATIVE.
11. DRAINAGE PIPE TO BE MINIMUM 375Ø CLASS 4 REINFORCED CONCRETE PIPE

SECTION A-A

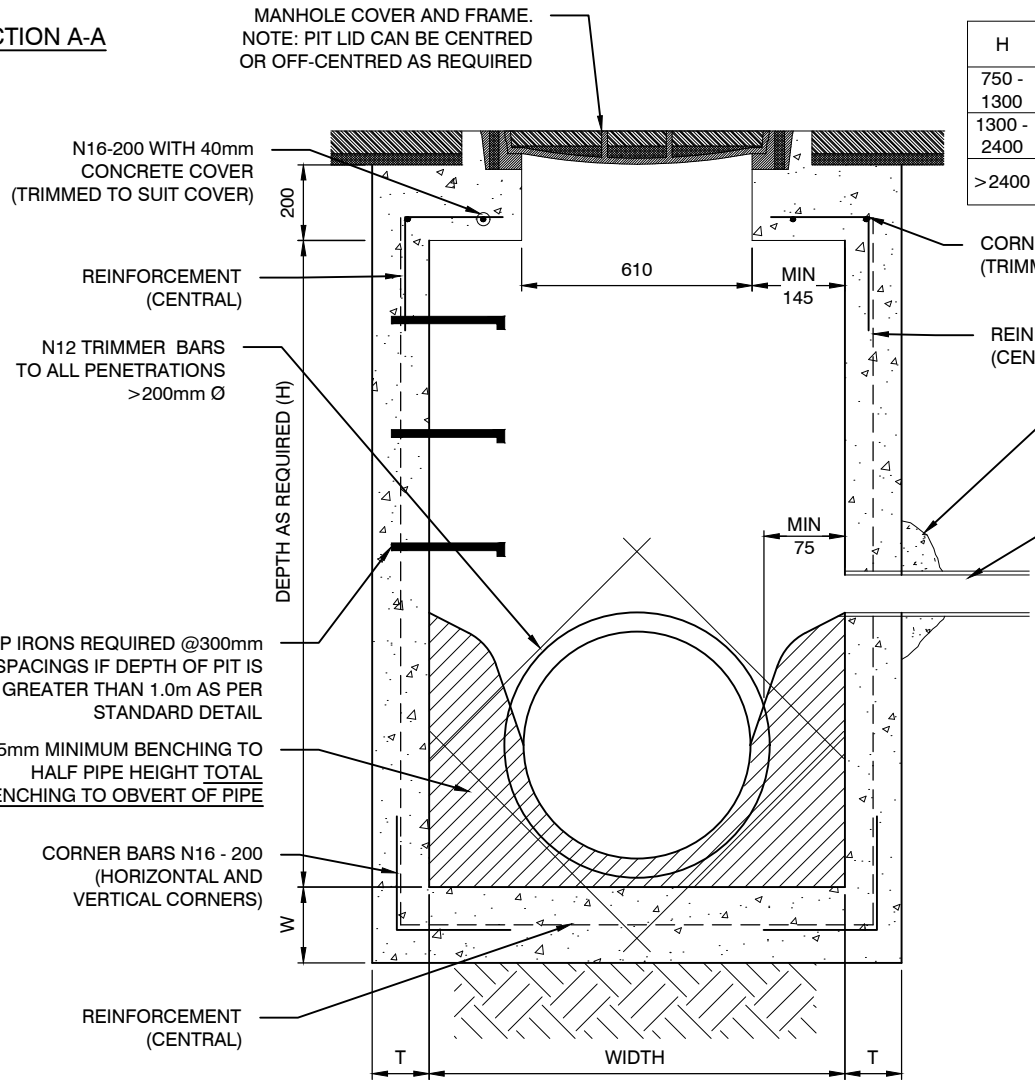

H	W	T	REINFORCEMENT
750 - 1300	200	150	SL82
1300 - 2400	250	200	SL102
>2400	AS PER STRUCTURAL ENGINEERS SPECIFICATION		

MINIMUM DIMENSIONS OF PIT (mm)		
Ø OF OUTLET ON STRAIGHT	WIDTH	LENGTH
UP TO 750	900	900
825 TO 900	1200	1200
1050	1200	1200
1200	1350	1200
1350	1500	1200
1500	1650	1200
1650	1800	1200
1800	1950	1200

SECTION 1:20

NOTE: ALL DIMENSIONS IN MILLIMETRES UNLESS OTHERWISE STATED

CITY OF SYDNEY

PITS & PIPES

JUNCTION PIT WITH INFILL LID

DRAINAGE

Rev D
Date *01.12.19*
Approved P S

Dwg No. 7.1.11

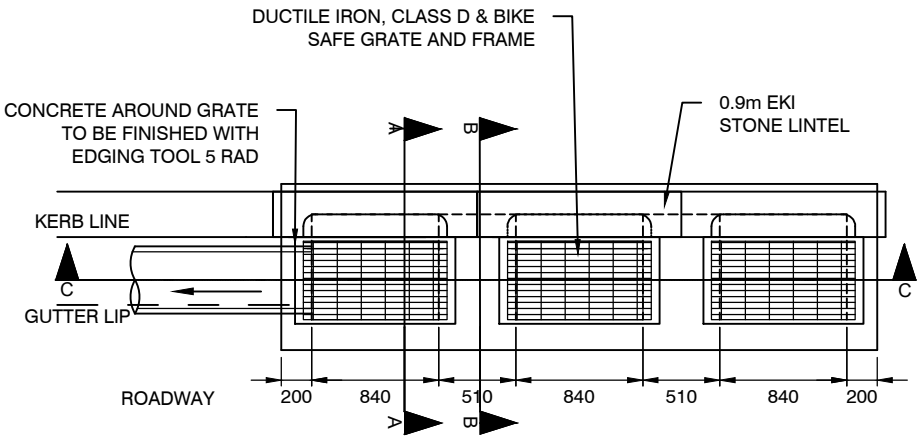

PLAN

H	W	T	REINFORCEMENT
750 - 1300	200	150	SL82
1300 - 2400	230	200	SL102
>2400	AS PER STRUCTURAL ENGINEERS SPECIFICATION		

NOTES:

1. ALL REINFORCEMENT TO COMPLY WITH AS46714
2. ALL REINFORCEMENT TO BE GRADE 500
3. ALL LIGATURES TO BE MIN R10.
4. COMPRESSIVE STRENGTH OF CONCRETE AT 28 DAYS TO BE 32MPa.
5. ALL REINFORCEMENT SHALL BE PLACED IN MID-SECTION UNO. OTHERWISE MIN CONCRETE COVER SHALL BE 40mm - B1 COVER
6. FOR ANY PENETRATION THROUGH WALLS AND SLABS GREATER THAN 200 SPACING, PROVIDE N12 TRIMMER BARS AND ADDITIONAL N12 REPLACEMENT BARS ON EACH SIDE.
7. LAP LENGTH IS TO BE MINIMUM 40 x BAR Ø UNLESS NOTED OTHERWISE.
8. 75mm MINIMUM BENCHING TO HALF PIPE HEIGHT TOTAL BENCHING TO OBVERT OF PIPE.
9. 100mmØ SUBSOIL DRAINAGE PIPE 3.0m LONG WRAPPED IN FABRIC SOCK TO BE PROVIDED IN PIPE TRENCHES ADJACENT TO INLET PIPES.
10. PROVIDE STEP IRONS WHERE PIT IS DEEPER THAN 1.0m AT 300mm CENTRES.
11. GRATES SHALL BE BICYCLE SAFE AND HAVE MAXIMUM INLET CAPACITY. ALL GRATES MUST BE APPROVED BY THE CITY'S REPRESENTATIVE.
12. DRAINAGE PIPE TO BE MINIMUM 375Ø CLASS 4 REINFORCED CONCRETE PIPE

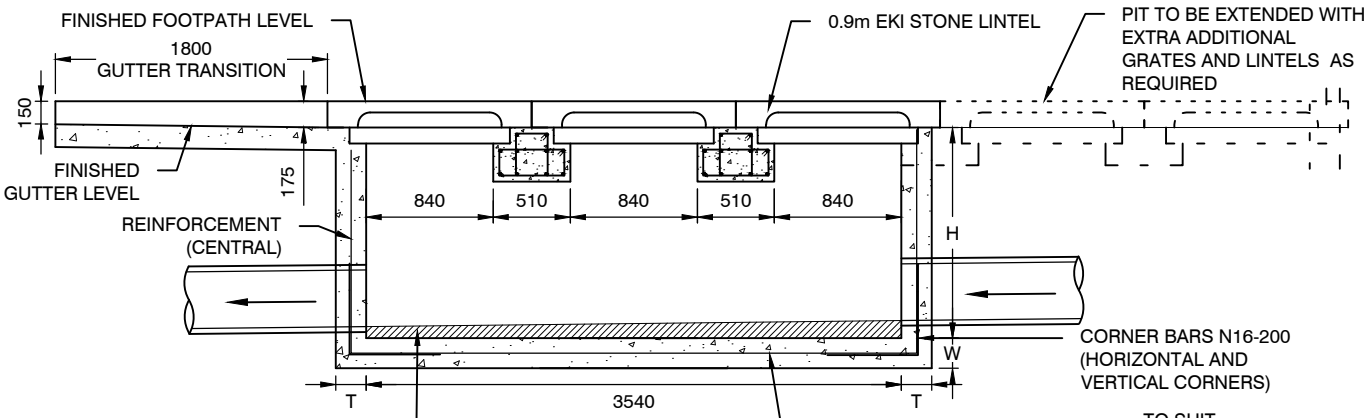

SECTION C-C

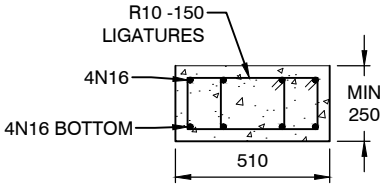

SECTION D-D

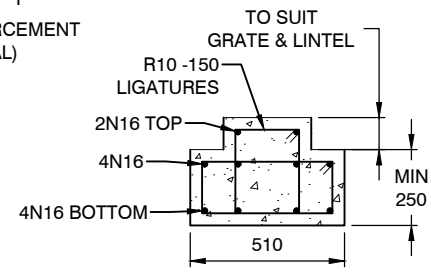

SECTION E-E

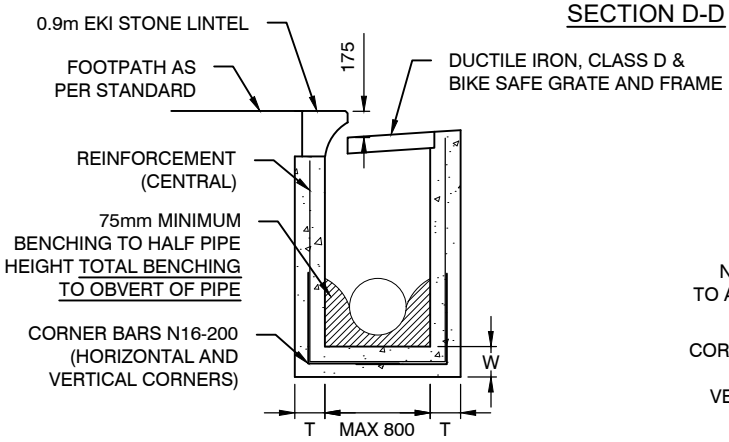

SECTION A-A

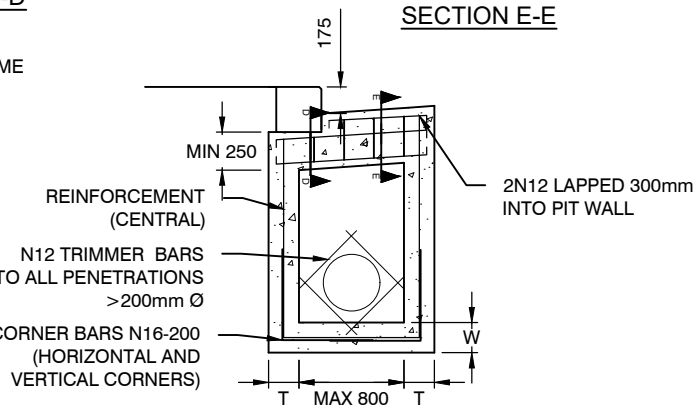

SECTION B-B

NOTE: ALL DIMENSIONS IN MILLIMETRES UNLESS OTHERWISE STATED

CITY OF SYDNEY

PITS & PIPES
HIGH FLOW INLET PIT (STONE KERB)

DRAINAGE

Rev	D
Date	01.12.19
Approved	P S

Dwg No. 7.1.12

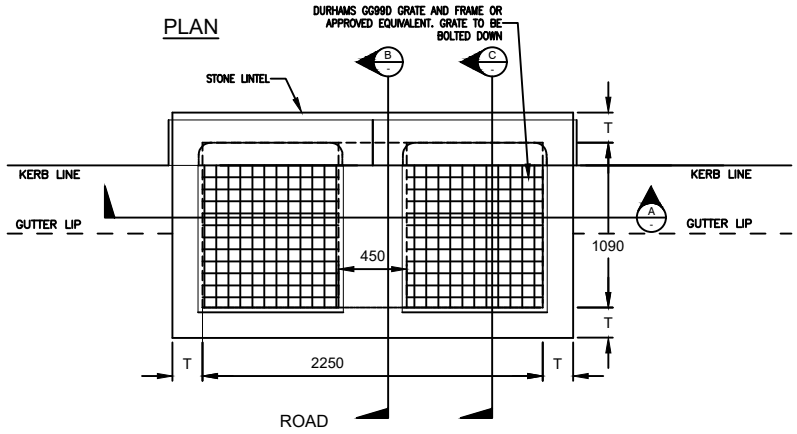

PLAN 1:50

NOTES:

1. ALL REINFORCEMENT TO COMPLY WITH AS46714
2. ALL REINFORCEMENT TO BE GRADE 500
3. ALL LIGATURES TO BE MIN R10.
4. COMPRESSIVE STRENGTH OF CONCRETE AT 28 DAYS TO BE 32MPa.
5. ALL REINFORCEMENT SHALL BE PLACED IN MID-SECTION UNO. OTHERWISE MIN CONCRETE COVER SHALL BE 40mm - B1 COVER
6. FOR ANY PENETRATION THROUGH WALLS AND SLABS GREATER THAN 200 SPACING, PROVIDE N12 TRIMMER BARS AND ADDITIONAL N12 REPLACEMENT BARS ON EACH SIDE.
7. LAP LENGTH IS TO BE MINIMUM 40 x BAR Ø UNLESS NOTED OTHERWISE.
8. 75mm MINIMUM BENCHING TO HALF PIPE HEIGHT TOTAL BENCHING TO OBVERT OF PIPE.
9. 100mmØ SUBSOIL DRAINAGE PIPE 3.0m LONG WRAPPED IN FABRIC SOCK TO BE PROVIDED IN PIPE TRENCHES ADJACENT TO INLET PIPES.
10. PROVIDE STEP IRONS WHERE PIT IS DEEPER THAN 1.0m AT 300mm CENTRES.
11. GRATES SHALL BE BICYCLE SAFE AND HAVE MAXIMUM INLET CAPACITY. ALL GRATES MUST BE APPROVED BY THE CITY'S REPRESENTATIVE.
12. DRAINAGE PIPE TO BE MINIMUM 375Ø CLASS 4 REINFORCED CONCRETE PIPE

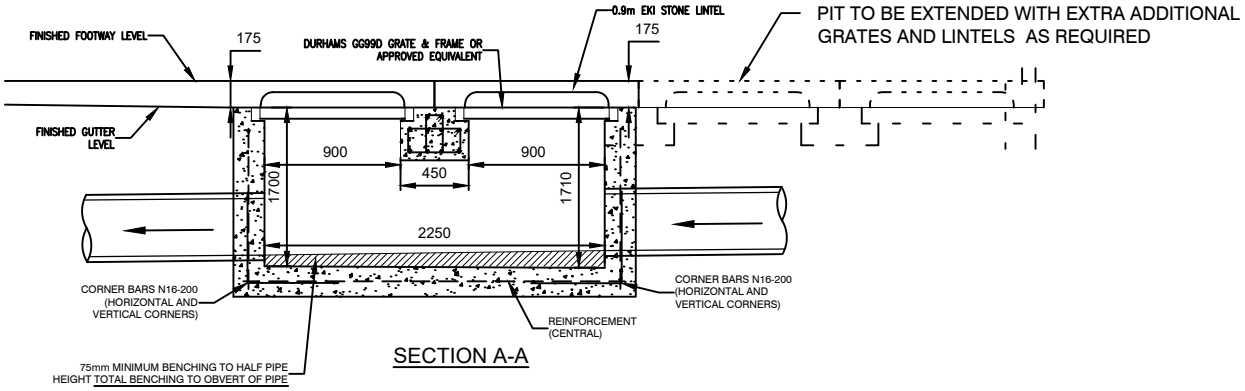

SECTION A-A

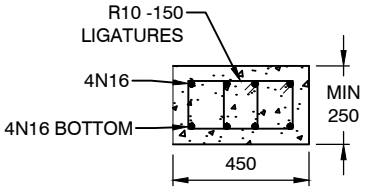

SECTION D-D

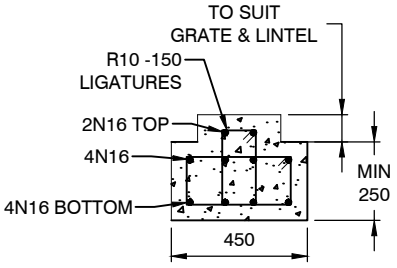

SECTION E-E

H	W	T	REINFORCEMENT
750 - 1300	200	150	SL82
1300 - 2400	250	200	SL102
>2400	AS PER STRUCTURAL ENGINEERS SPECIFICATION		

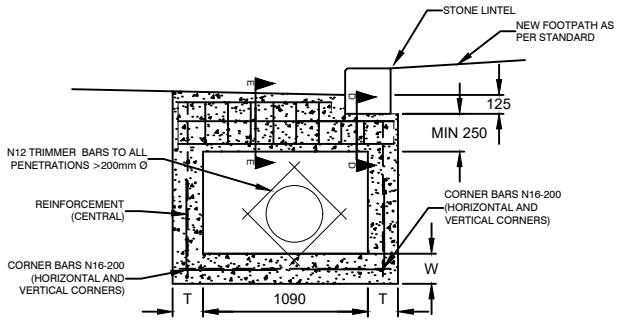

SECTION B-B

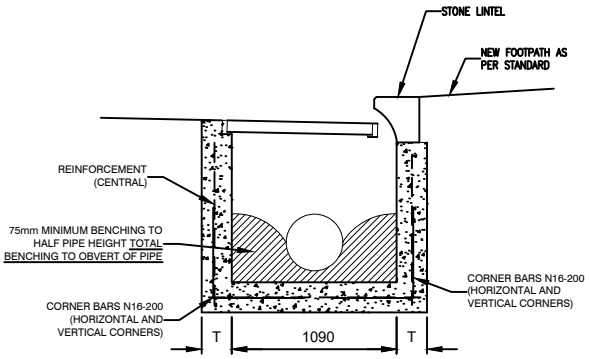

SECTION C-C

NOTE: ALL DIMENSIONS IN MILLIMETRES UNLESS OTHERWISE STATED

CITY OF SYDNEY

PITS & PIPES
STANDARD SURCHARGE PIT (STONE KERB)

DRAINAGE

Rev	D
Date	*01.12.19*
Approved	P S

Dwg No. 7.1.13

MANHOLE COVER AND FRAME

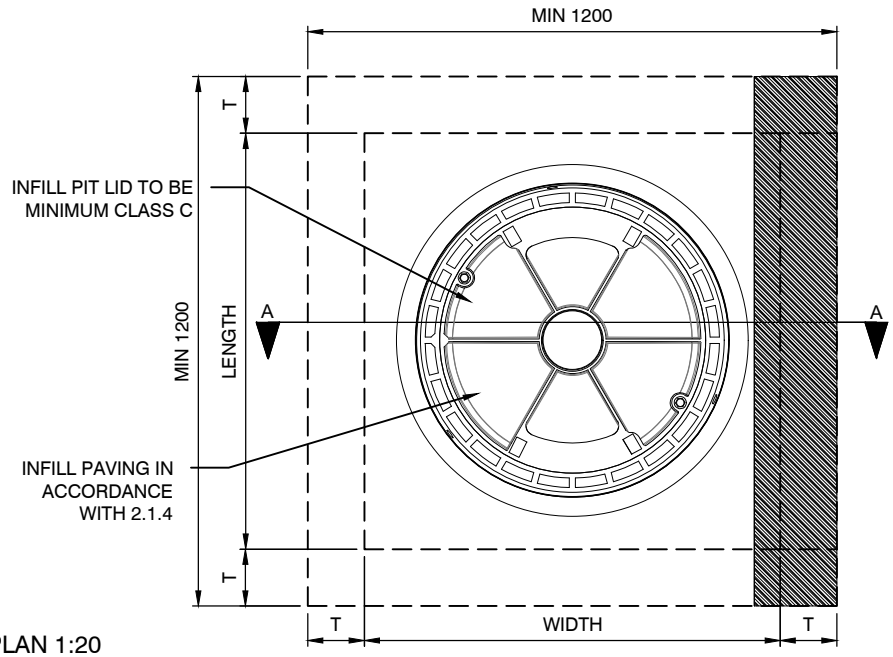

PLAN 1:20

NOTES:

1. ALL REINFORCEMENT TO COMPLY WITH AS46714
2. ALL REINFORCEMENT TO BE GRADE 500
3. COMPRESSIVE STRENGTH OF CONCRETE AT 28 DAYS TO BE 32MPa.
4. ALL REINFORCEMENT SHALL BE PLACED IN MID-SECTION UNO. OTHERWISE MIN CONCRETE COVER SHALL BE 40mm - B1 COVER
5. FOR ANY PENETRATION THROUGH WALLS AND SLABS GREATER THAN 200 SPACING, PROVIDE N12 TRIMMER BARS AND ADDITIONAL N12 REPLACEMENT BARS ON EACH SIDE.
6. LAP LENGTH IS TO BE MINIMUM 40 x BAR Ø UNLESS NOTED OTHERWISE.
7. 75mm MINIMUM BENCHING TO HALF PIPE HEIGHT TOTAL BENCHING TO OBVERT OF PIPE.
8. 100mmØ SUBSOIL DRAINAGE PIPE 3.0m LONG WRAPPED IN FABRIC SOCK TO BE PROVIDED IN PIPE TRENCHES ADJACENT TO INLET PIPES.
9. PROVIDE STEP IRONS WHERE PIT IS DEEPER THAN 1.0m AT 300mm CENTRES.
10. GRATES SHALL BE BICYCLE SAFE AND HAVE MAXIMUM INLET CAPACITY. ALL GRATES MUST BE APPROVED BY THE CITY'S REPRESENTATIVE.
11. DRAINAGE PIPE TO BE MINIMUM 375Ø CLASS 4 REINFORCED CONCRETE PIPE

SECTION A-A

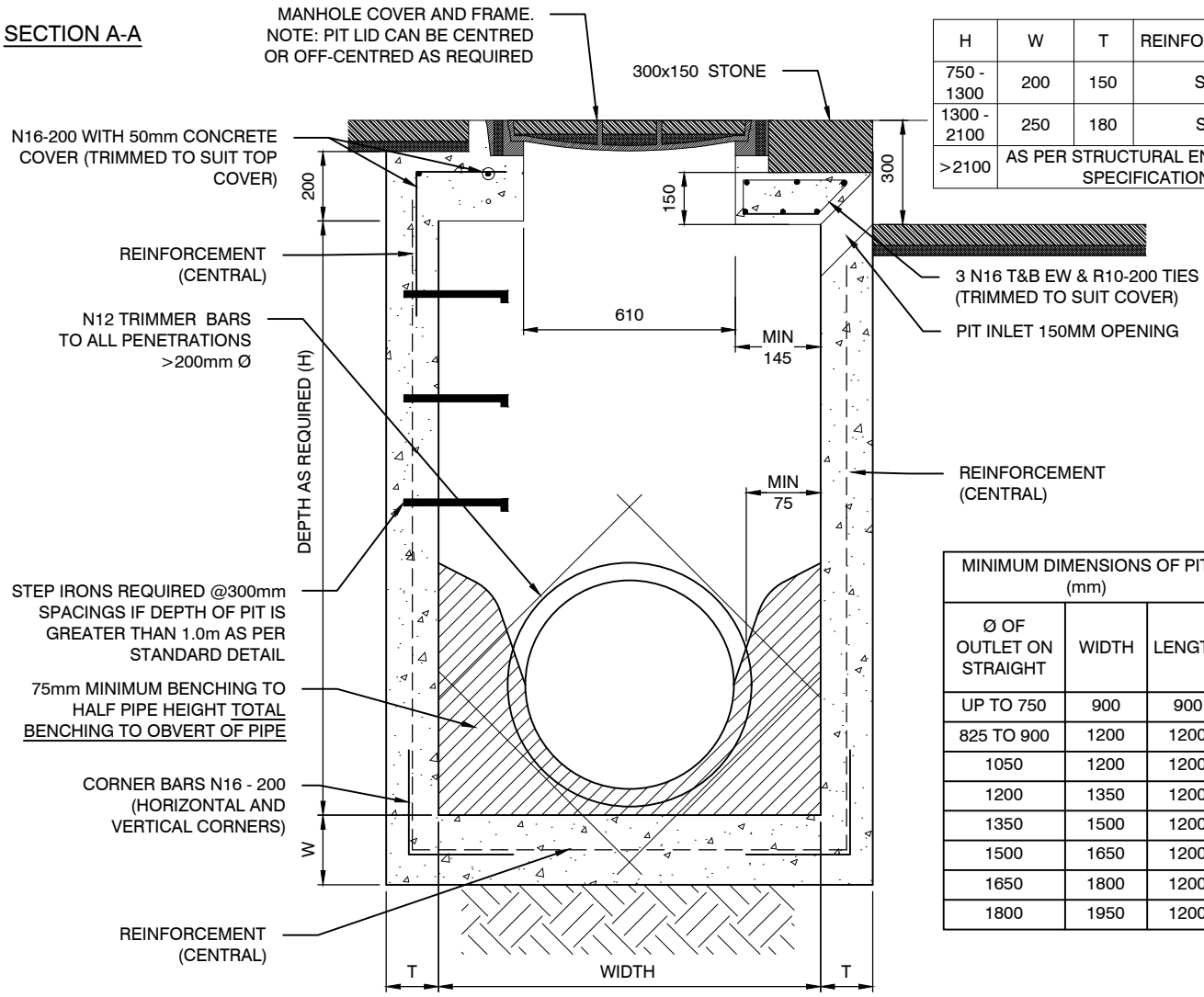

H	W	T	REINFORCEMENT
750 - 1300	200	150	SL82
1300 - 2100	250	180	SL81
>2100	AS PER STRUCTURAL ENGINEERS SPECIFICATION		

MINIMUM DIMENSIONS OF PIT (mm)		
Ø OF OUTLET ON STRAIGHT	WIDTH	LENGTH
UP TO 750	900	900
825 TO 900	1200	1200
1050	1200	1200
1200	1350	1200
1350	1500	1200
1500	1650	1200
1650	1800	1200
1800	1950	1200

SECTION 1:20

NOTE: ALL DIMENSIONS IN MILLIMETRES UNLESS OTHERWISE STATED

CITY OF SYDNEY

PITS & PIPES

KERB INLET PIT AT STATION

DRAINAGE

Rev D
Date *01.12.19*
Approved P S

Dwg No. 7.1.14

NOTES:

1. ALL REINFORCEMENT TO COMPLY WITH AS46714
2. ALL REINFORCEMENT TO BE GRADE 500
3. COMPRESSIVE STRENGTH OF CONCRETE AT 28 DAYS TO BE 32MPa.
4. ALL REINFORCEMENT SHALL BE PLACED IN MID-SECTION UNO. OTHERWISE MIN CONCRETE COVER SHALL BE 40mm - B1 COVER
5. FOR ANY PENETRATION THROUGH WALLS AND SLABS GREATER THAN 200 SPACING, PROVIDE N12 TRIMMER BARS AND ADDITIONAL N12 REPLACEMENT BARS ON EACH SIDE.
6. LAP LENGTH IS TO BE MINIMUM 40 x BAR Ø UNLESS NOTED OTHERWISE.
7. 75mm MINIMUM BENCHING TO HALF PIPE HEIGHT TOTAL BENCHING TO OBVERT OF PIPE.
8. 100mmØ SUBSOIL DRAINAGE PIPE 3.0m LONG WRAPPED IN FABRIC SOCK TO BE PROVIDED IN PIPE TRENCHES ADJACENT TO INLET PIPES.
9. PROVIDE STEP IRONS WHERE PIT IS DEEPER THAN 1.0m AT 300mm CENTRES.
10. GRATES SHALL BE BICYCLE SAFE AND HAVE MAXIMUM INLET CAPACITY. ALL GRATES MUST BE APPROVED BY THE CITY'S REPRESENTATIVE.
11. DRAINAGE PIPE TO BE MINIMUM 375Ø CLASS 4 REINFORCED CONCRETE PIPE

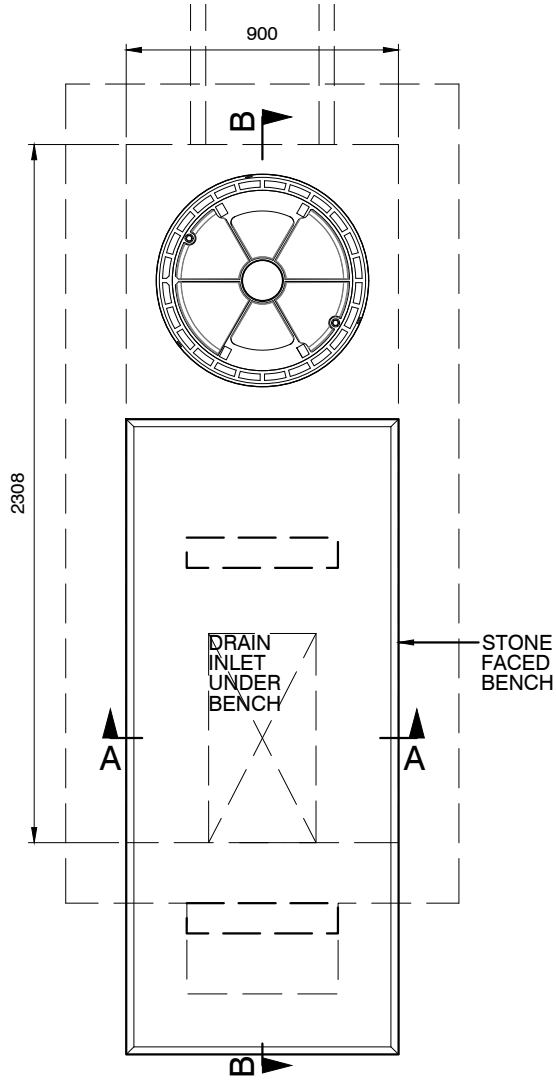

PLAN
1:25

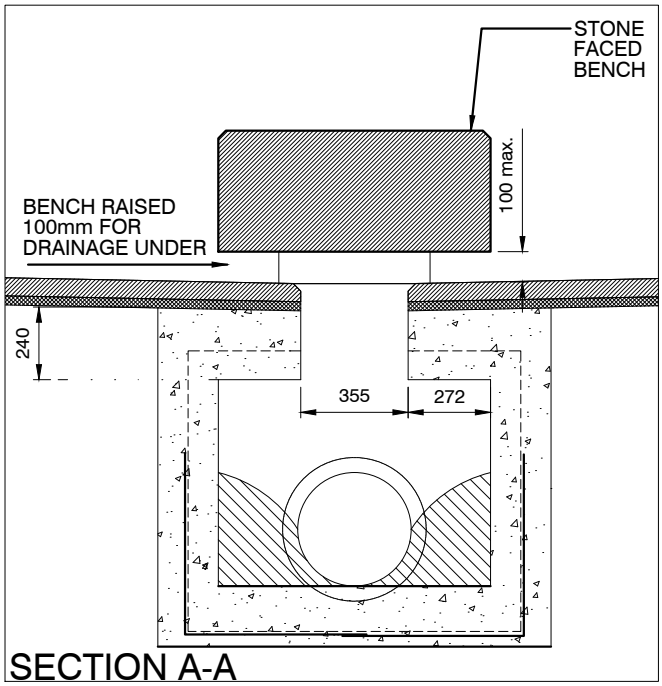

SECTION A-A
1:25

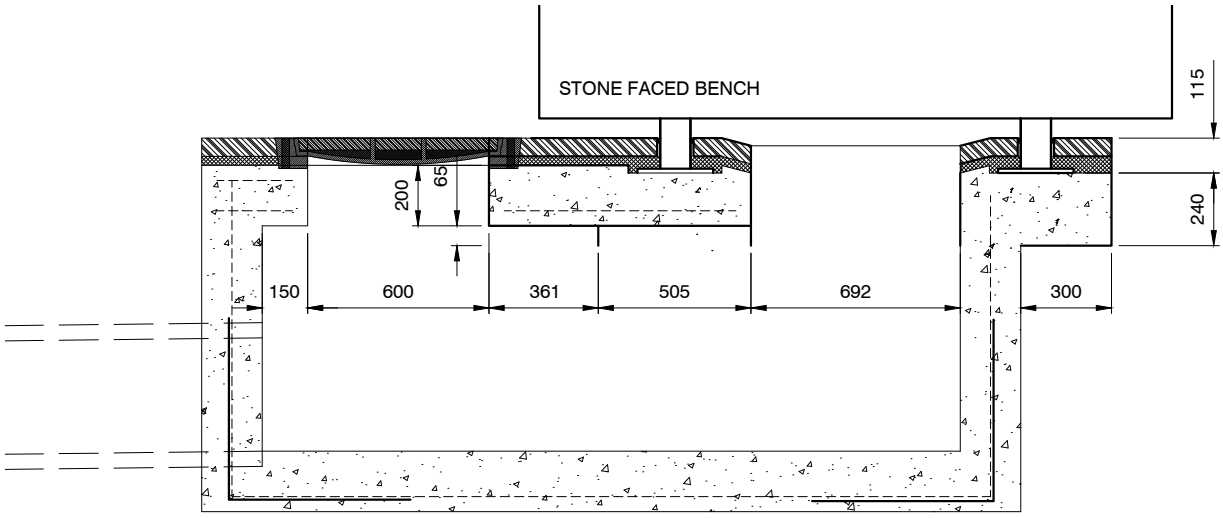

SECTION B-B
1:25

NOTE: ALL DIMENSIONS IN MILLIMETRES UNLESS OTHERWISE STATED

CITY OF SYDNEY

PITS & PIPES

SLOTTED INLET DRAIN UNDER SEAT

DRAINAGE

Rev	D
Date	01.12.19
Approved	P S

Dwg No. 7.1.15

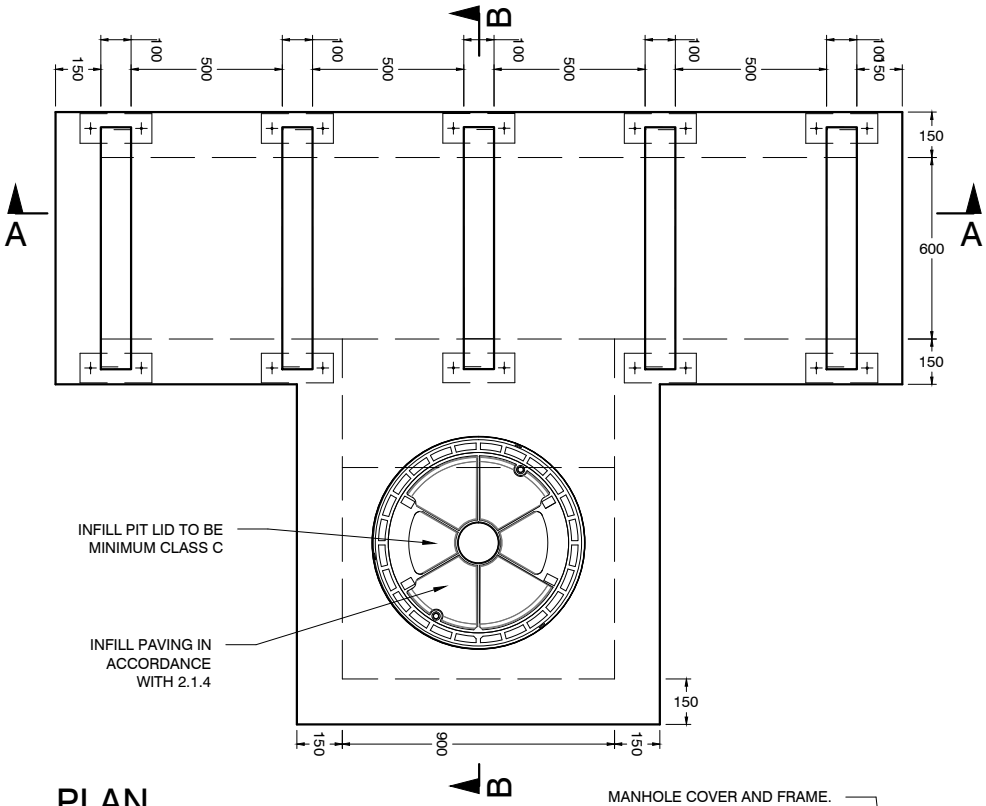

PLAN
1:25

NOTES:

1. THIS DRAWING IS TO BE READ IN CONJUNCTION WITH DWG 2.1.4 & 2.1.17
2. ALL REINFORCEMENT TO COMPLY WITH AS46714
3. ALL REINFORCEMENT TO BE GRADE 500
4. COMPRESSIVE STRENGTH OF CONCRETE AT 28 DAYS TO BE 32MPa.
5. ALL REINFORCEMENT SHALL BE PLACED IN MID-SECTION UNO. OTHERWISE MIN CONCRETE COVER SHALL BE 40mm - B1 COVER
6. FOR ANY PENETRATION THROUGH WALLS AND SLABS GREATER THAN 200 SPACING, PROVIDE N12 TRIMMER BARS AND ADDITIONAL N12 REPLACEMENT BARS ON EACH SIDE.
7. LAP LENGTH IS TO BE MINIMUM 40 x BAR Ø UNLESS NOTED OTHERWISE.
8. 75mm MINIMUM BENCHING TO HALF PIPE HEIGHT TOTAL BENCHING TO OBVERT OF PIPE.
9. 100mmØ SUBSOIL DRAINAGE PIPE 3.0m LONG WRAPPED IN FABRIC SOCK TO BE PROVIDED IN PIPE TRENCHES ADJACENT TO INLET PIPES.
10. PROVIDE STEP IRONS WHERE PIT IS DEEPER THAN 1.0m AT 300mm CENTRES.
11. GRATES SHALL BE BICYCLE SAFE AND HAVE MAXIMUM INLET CAPACITY. ALL GRATES MUST BE APPROVED BY THE CITY'S REPRESENTATIVE.
12. DRAINAGE PIPE TO BE MINIMUM 375Ø CLASS 4 REINFORCED CONCRETE PIPE

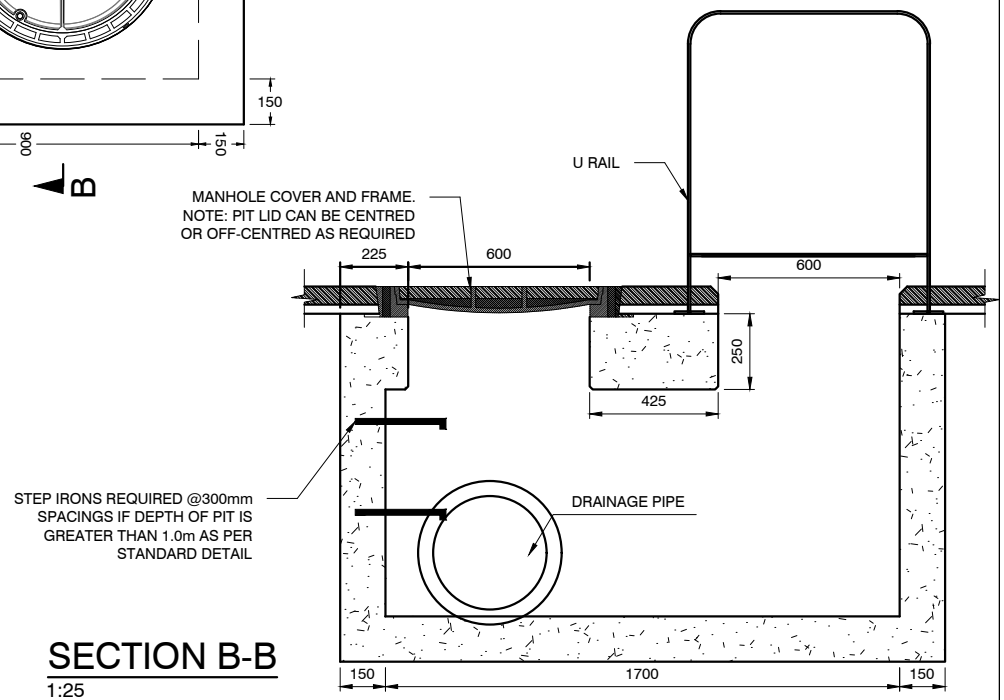

SECTION B-B
1:25

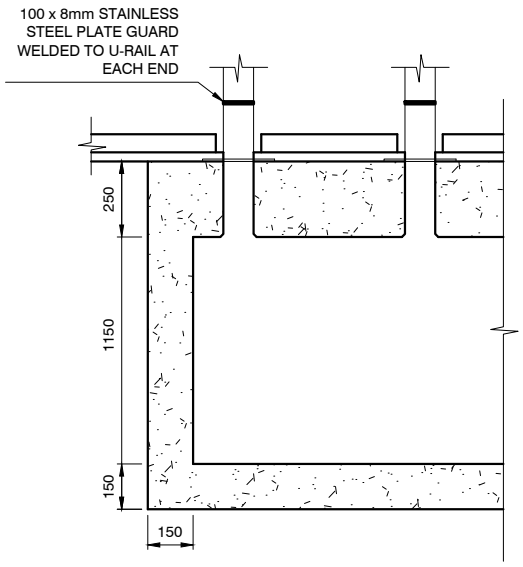

SECTION A-A
1:25

NOTE: ALL DIMENSIONS IN MILLIMETRES UNLESS OTHERWISE STATED

CITY OF SYDNEY

PITS & PIPES
SLOTTED INLET DRAIN UNDER BICYCLE PARKING
LAYOUT

DRAINAGE

Rev	D
Date	01.12.19
Approved	P S

Dwg No. 7.1.16

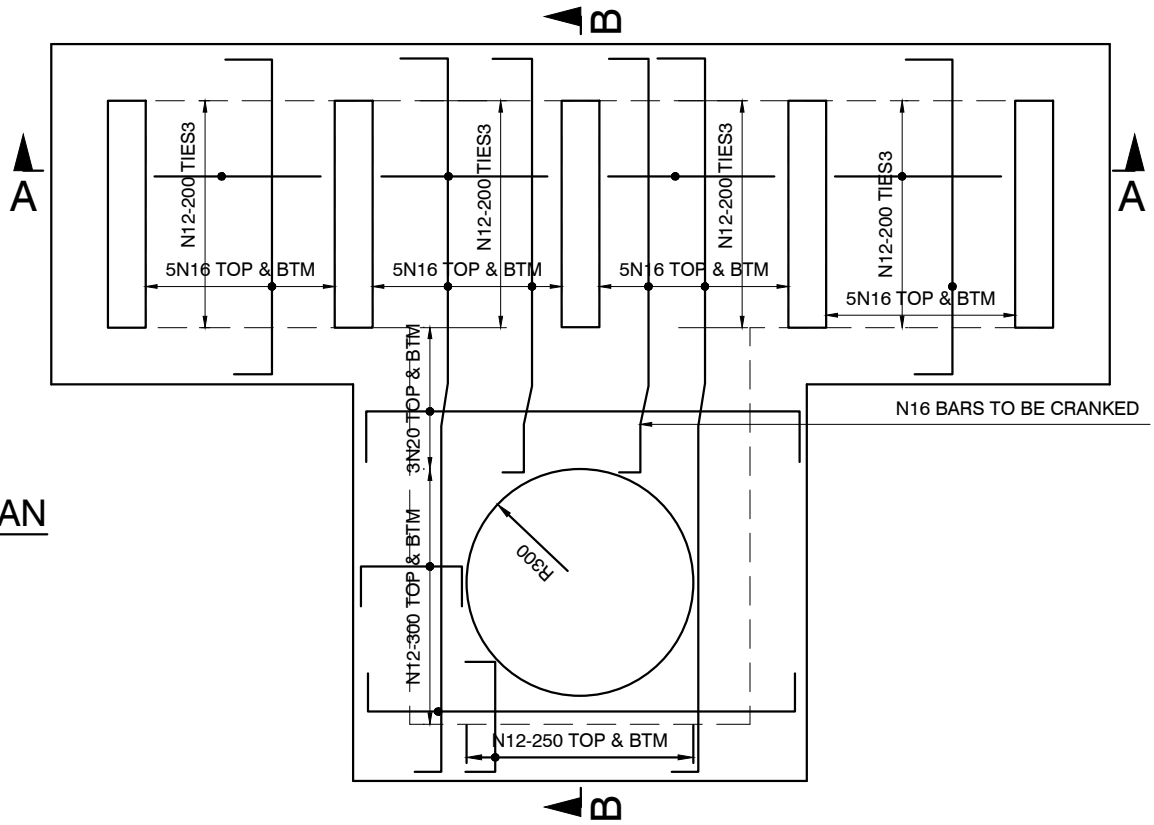

PLAN
1:25

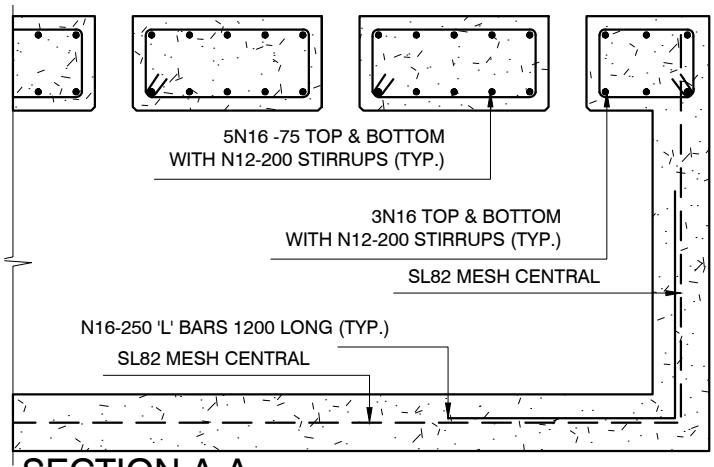

SECTION A-A
1:25

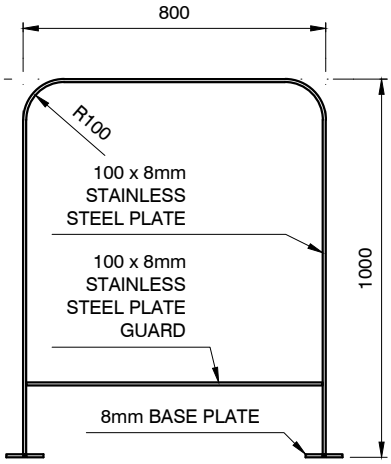

U RAIL DETAIL
1:20

SECTION B-B
1:25

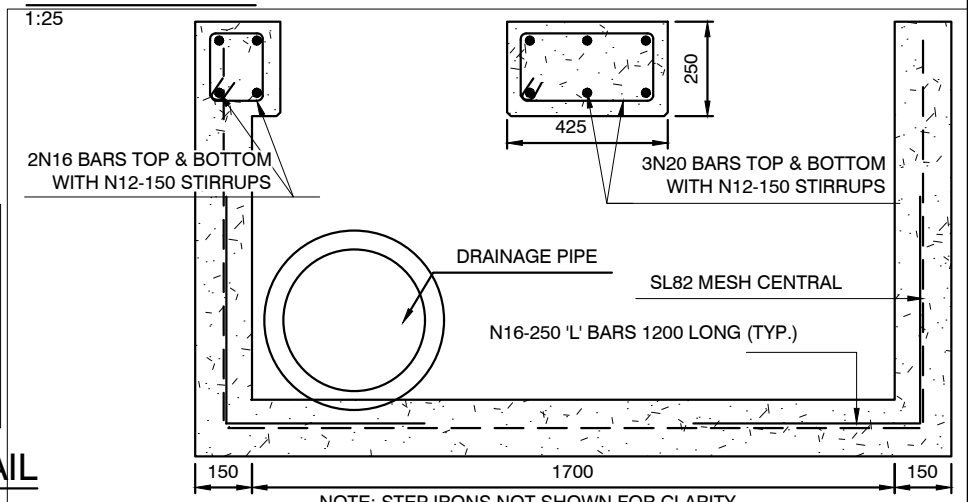

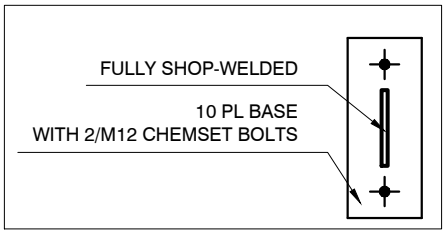

U RAIL BASE PLATE DETAIL
1:10

NOTE: STEP IRONS NOT SHOWN FOR CLARITY
NOTE: ALL DIMENSIONS IN MILLIMETRES UNLESS OTHERWISE STATED

CITY OF SYDNEY	PITS & PIPES SLOTTED INLET DRAIN UNDER BICYCLE PARKING REINFORCEMENT	Rev D Date 01.12.19 Approved P S	DRAINAGE Dwg No. 7.1.17

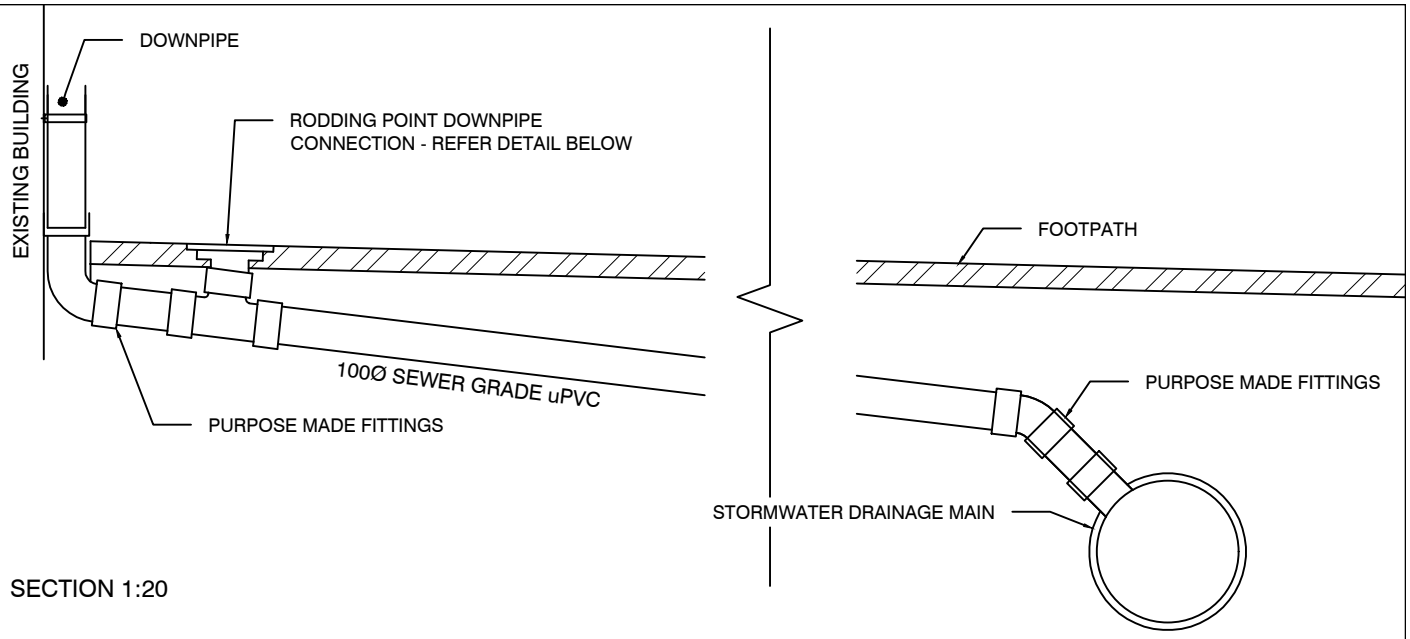

SECTION 1:20

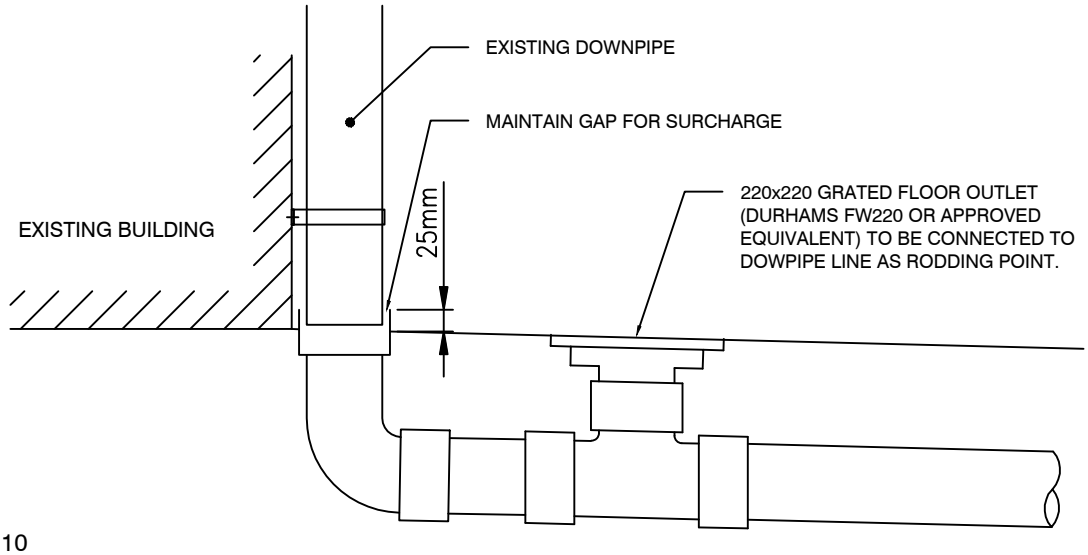

DETAIL 1:10

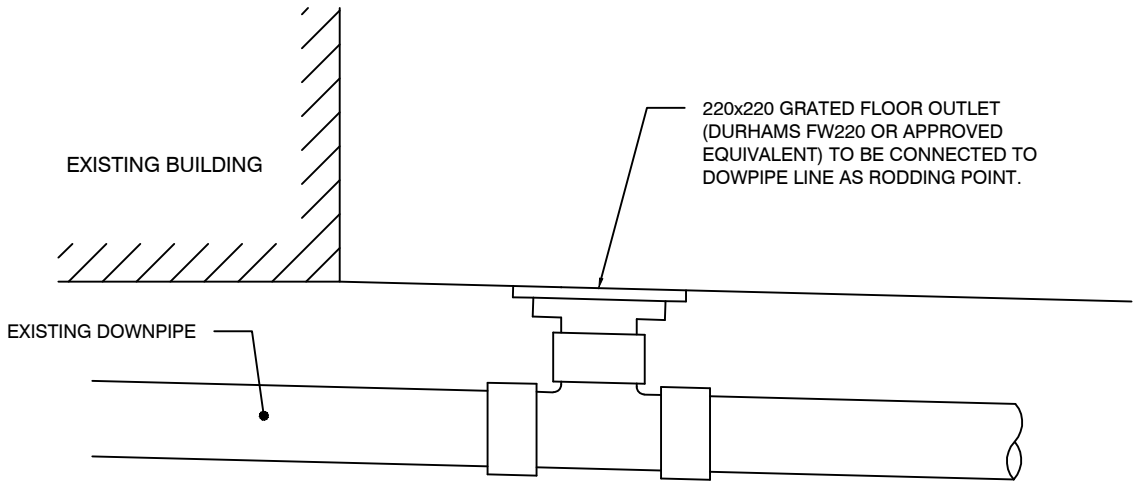

DETAIL 1:10

NOTE: ALL DIMENSIONS IN MILLIMETRES UNLESS OTHERWISE STATED

CITY OF SYDNEY

PITS & PIPES

BOUNDARY DOWNPIPE RODDING PIT

DRAINAGE

Rev	D
Date	*01.12.19*
Approved	P S

Dwg No. 7.1.18

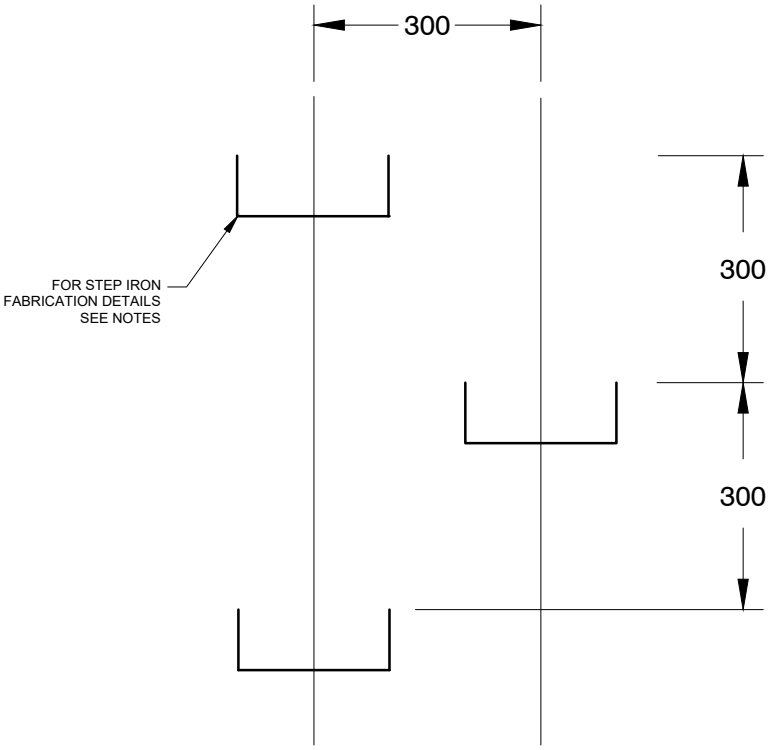

STEP IRON ARRANGEMENT

ELEVATION 1:10

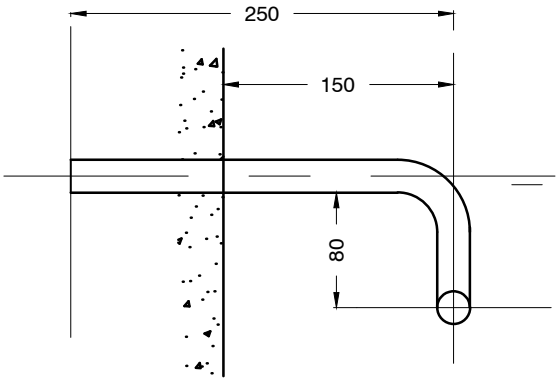

NOTES:

1: STEP IRONS TO BE FABRICATED FROM 20mm Ø M.S.
2: ALL BENDS TO BE FORMED AROUND 12mm diameter PIN
3: STEP IRONS TO BE PROVIDED IN PITS DEEPER THAN 1.0m
4: STEP IRONS TO BE HOT-DIPPED GALVANISED
5: STEP IRONS TO BE LOCATED DIRECTLY ABOVE PIT OUTLET PIPE

SECTION 1:5

CITY OF SYDNEY	PIT & PIPES STANDARD STEP IRONS	DRAINAGE Rev D Date 01.12.19 Approved P S Dwg No. 7.1.19